7 HE

RANGE

Simplicity

GREENHOUSES

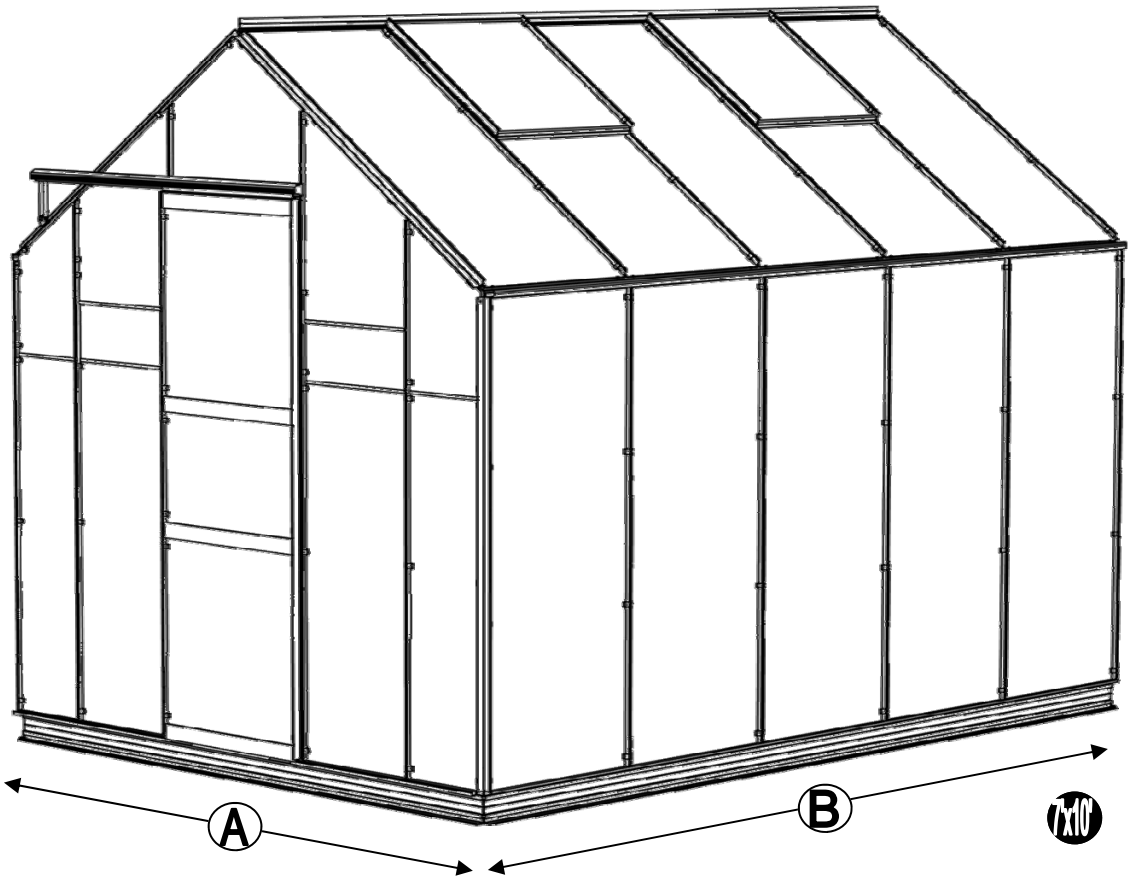

	A (mm)	B (mm)
7’4” x 4’3”	2233	1295
7’4” x 6’3”		1910
7’4” x 8’3”		2530
7’4” x 10’4”		3150
7’4” x 12’4”		3770

Issue 2

GB

Thank you for purchasing your new Simplicity greenhouse. We recommend you familiarise yourself with the instructions and read all safety information before you commence assembly. This instruction manual is also available online at www.greenhousepeople.co.uk in our technical help section should you need to reprint it. Should you require any additional advice you can always call us on 01782 388811.

These instructions are divided into sections; **B**-base, **partlists**,**1**-sides, **2**-front gable, **3**-rear, **4**-joining the four sides together, **5**-roof, **6**-vent, **7**-door, **8**-glazing(**8a** toughened glass, **8b** horticultural glass, **8c** polycarbonate glazing when available), **9**-vent attachment, **10**-door attachment, **11** anchoring down, **back cover**-packing list. If you need to contact us for assistance please refer to the relevant section/s.

Safety Warning

- Glass and aluminium can potentially cause injury. Please ensure you wear protective goggles, gloves, headgear and suitable footwear when assembling and glazing the building.
- Please remember that glass is fragile and should be handled with extreme care. Always clear up and dispose of any breakages immediately.
- Do not assemble the greenhouse in high winds.
- For safety reasons and ease of assembly, we recommend that this greenhouse is assembled by a minimum of two people.
- Please clear all lying snow from the greenhouse roof as it can cause the roof to buckle or collapse.

Site Preparation

- When selecting a site for your greenhouse, it is vital that you choose as flat and level an area as possible.
- A concrete or slabbed base will provide the most solid foundation for your greenhouse.
- IMPORTANT: Do **not** fix your building down until the building is fully assembled, including glazing.
- Avoid placing your greenhouse under trees or in other vulnerable locations.
- To minimise the risk of wind damage, try to select as sheltered a site as possible, e.g. beside a hedgerow or garden fence.

Additional Considerations

- Please bear in mind that assembling your greenhouse can be time consuming. You may need to spread the construction over two or more days. We recommend that you avoid leaving the building partially glazed. If you ever have to leave your greenhouse half assembled and not anchored down, weigh it down with slabs or bags of sand to stop the wind moving it.
- You will find it helpful to prepare a large, clean and clear area in which to work in. A garage floor or flat lawn area is ideal.
- If you have arranged for someone to install your greenhouse for you, please check that all components are included. Most parts are numbered and can be identified by a stamp or removable label. Alternatively, the components can be identified by lengths detailed in the packing list (see diagram below).
- Anchoring down your greenhouse should be the final stage of construction (including glazing).
- Once installed your greenhouse requires little maintenance, but to maintain the smooth running of your door(s) WD40 or similar can be applied to the door wheels and lower door guides.

Guarantee

- Your new Simplicity greenhouse is guaranteed for 10 years against faulty manufacture of the framework. This does not include glazing, moving parts, accidental damage or wind damage.

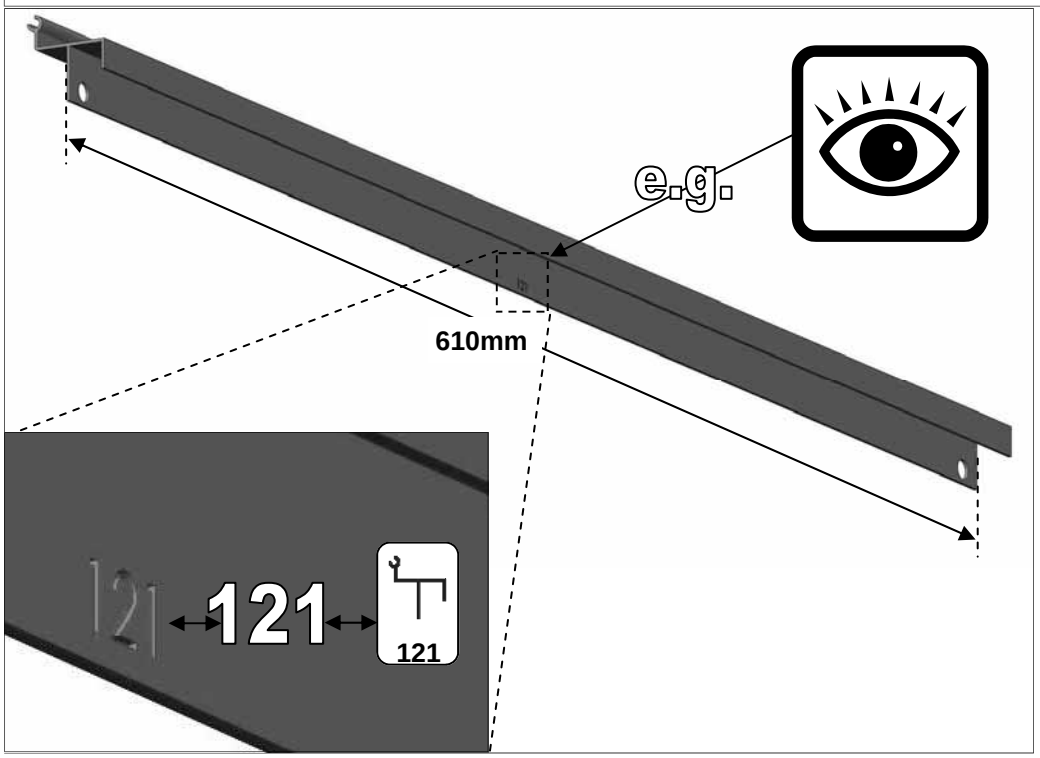

KEY SYMBOL	KEY DESCRIPTION
	LOOK
	THINK
	THIS SECTION RELATES TO ANOTHER (e.g. 1 to 5)
	CORRECT
	DO NOT FIX DOWN!
	TWIST TO LOCK
	TIGHTEN
	DO NOT WET!

	A (mm)	B (mm)
7’4” x 4’3”	2233	1295
7’4” x 6’3”		1910
7’4” x 8’3”		2530
7’4” x 10’4”		3150
7’4” x 12’4”		3770

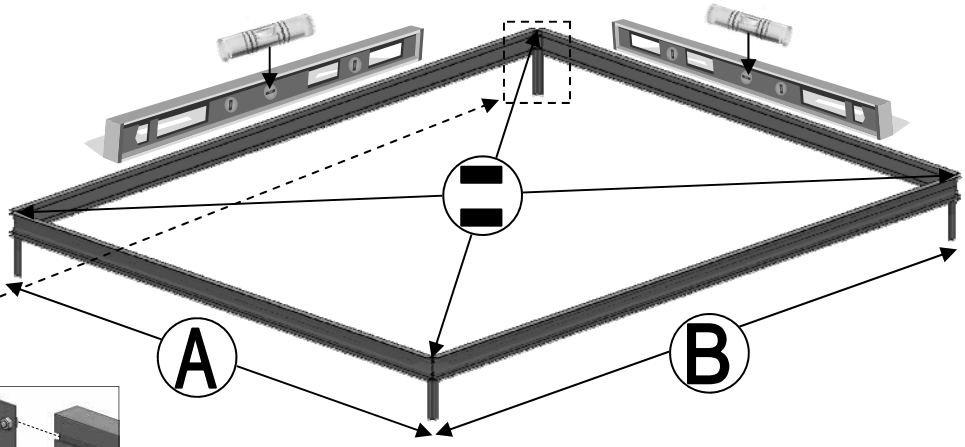

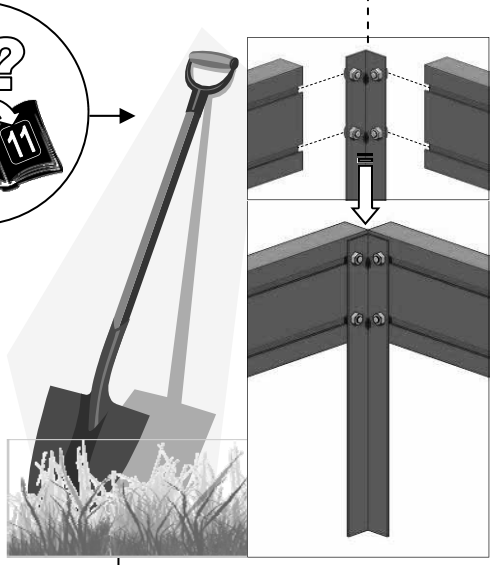

OPTION 1: base on grass

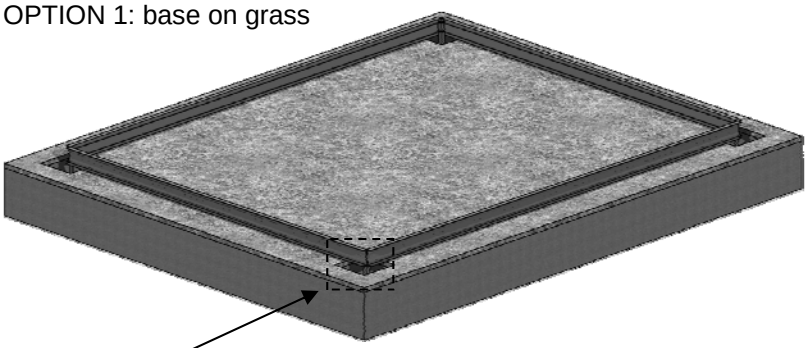

OPTION 2: base on slabs

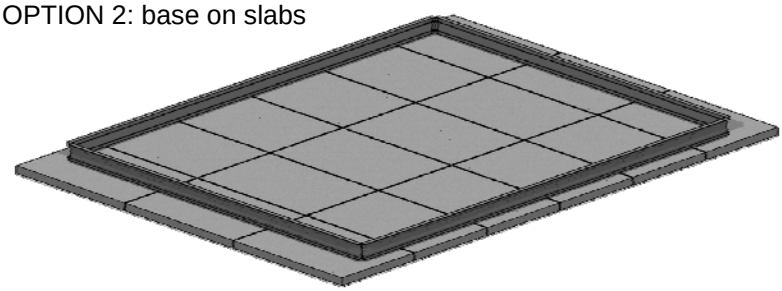

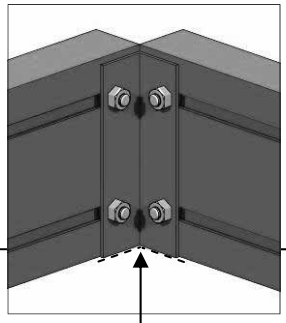

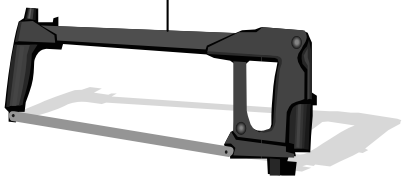

OPTION 3: base on concrete

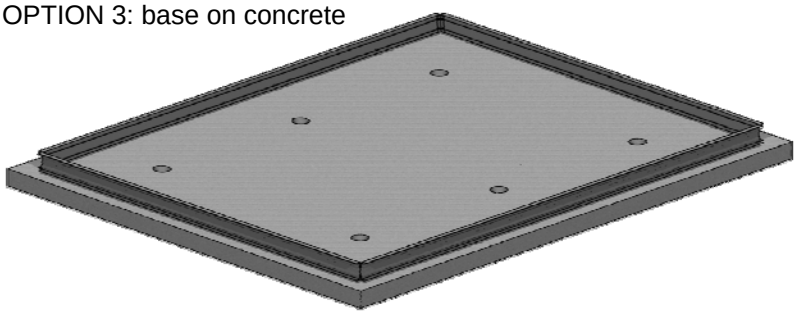

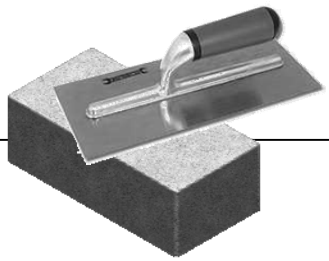

OPTION 4: no base on brick

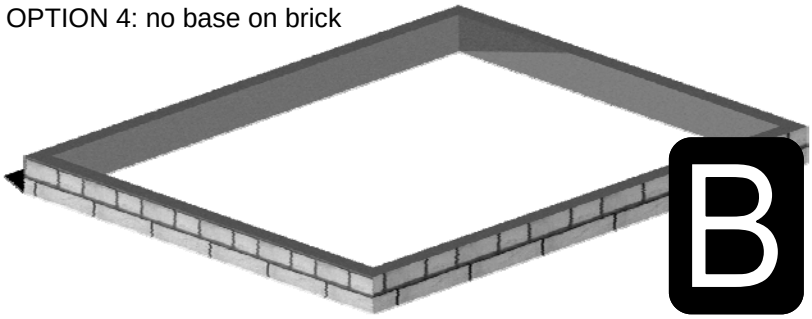

B

7 HE

Page Ref	Part No.	Section	Size (mm)	7 4	7 6	7 8	7 10	7 12
1	1		3720					2
	5		3100				2	
	17		2480			2		
	25		1860		2			
	55		1240	2				
	3		3720					2
	8		3100				2	
	14		2480			2		
	27		1860		2			
	58		1240	2				
	21		1585	2	4			
	47		1504	2	4	6	8	10

Page Ref	Part No.	Section	Size (mm)	7 4	7 6	7 8	7 10	7 12
2	240		2174	1				
	42		1730	2				
	43			2				
	243		2050	2				
	244			2				
2 + 3	76		1504	2				
	77			2				
	245		1296	2				
	246			2				
	242		2154	1				
	249		773	2				
	285		1647	4				

Page Ref	Part No.	Section	Size (mm)	7 4	7 6	7 8	7 10	7 12
2	241		2174	1				
2 + 3	201			2				
3	200			4				
4+10	54		1275	1				
5	2		3720					1
	6		3100				1	
	12		2480			1		
	26		1860		1			
	57		1240	1				
	247		1305	2	4	6	8	10
	248		1390	2	4			
	85 / 93		628 / 636	1	1	2	2	2
6	121		612	1	1	2	2	2
	123		612	1	1	2	2	2
	124		610	2	2	4	4	4
				1	1	2	2	2
				2	2	4	4	4
			M4	6	6	12	12	12
			M6	2	2	4	4	4

Page Ref	Part No.	Section	Size (mm)	7 4	7 6	7 8	7 10	7 12
7	41		1763	2				
	95		614	1				
	130		619	4				
	137		883	2				
				2				
				2				
				2				
			4000	1				
8				126	162	198	234	270
				92	112	130	148	166
				5 roll	6 roll	6 roll	7 roll	8 roll
10				1				
	79		168	1				
		M6		103	116	126	138	148
		M6		104	116	126	138	148
		M6 CROP		1				

7 HE

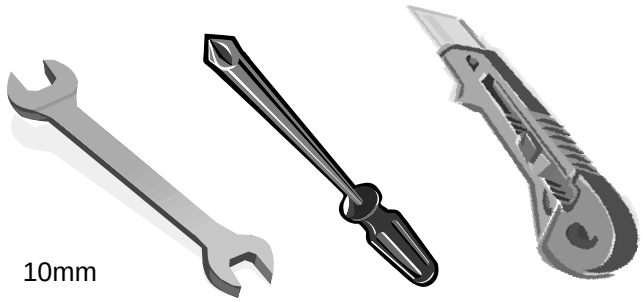

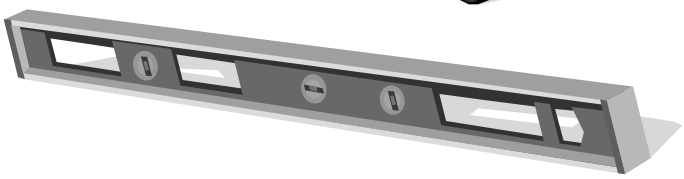

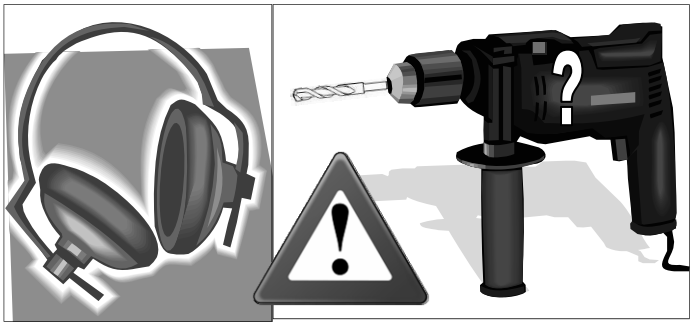

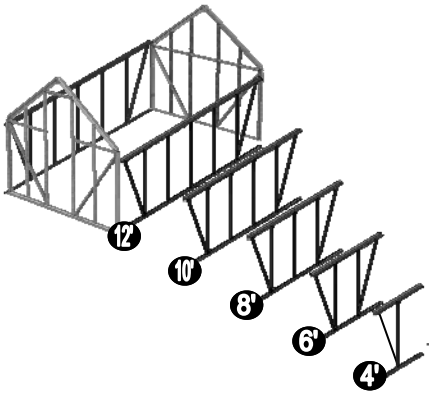

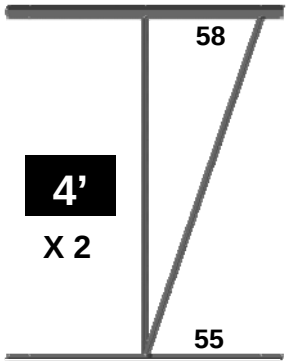

Part No	mm	Quantity
58	1245	2
47	1504	2
55	1245	2
21	1586	2
M6		6
M6		6

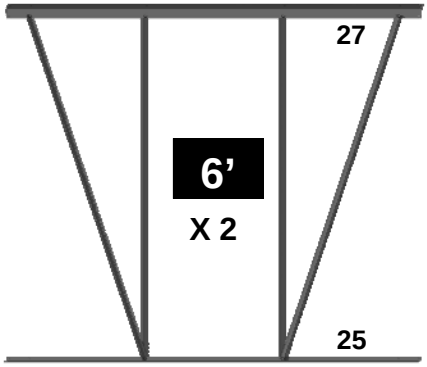

Part No	mm	Quantity
27	1860	2
47	1504	4
25	1860	2
21	1586	4
M6		12
M6		12

e.g. 1

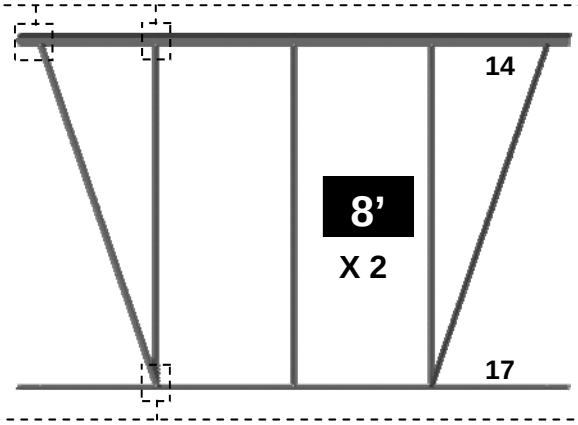

Part No	mm	Quantity
14	2480	2
47	1504	6
17	2480	2
21	1586	4
M6		16
M6		16

e.g. 2

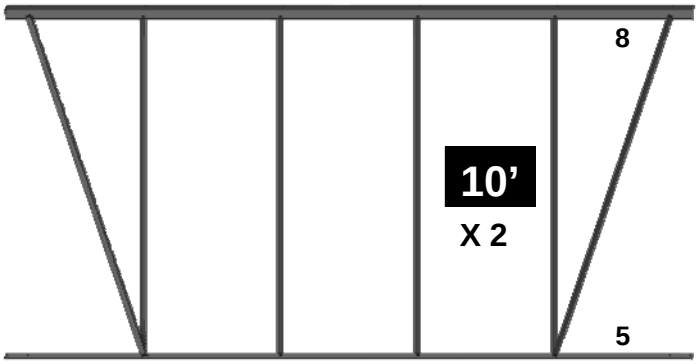

Part No	mm	Quantity
8	3100	2
47	1504	8
5	3100	2
21	1586	4
M6		20
M6		20

ALL VIEWS INTERNAL

1

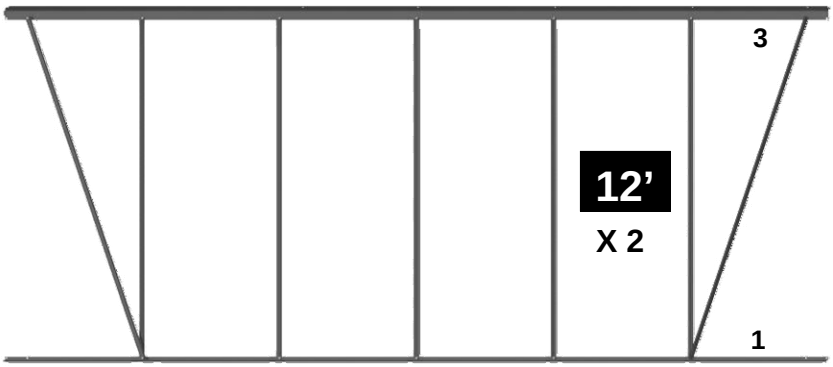

Part No	mm	Quantity
3	3720	2
47	1504	10
1	3720	2
21	1586	4
M6		24
M6		24

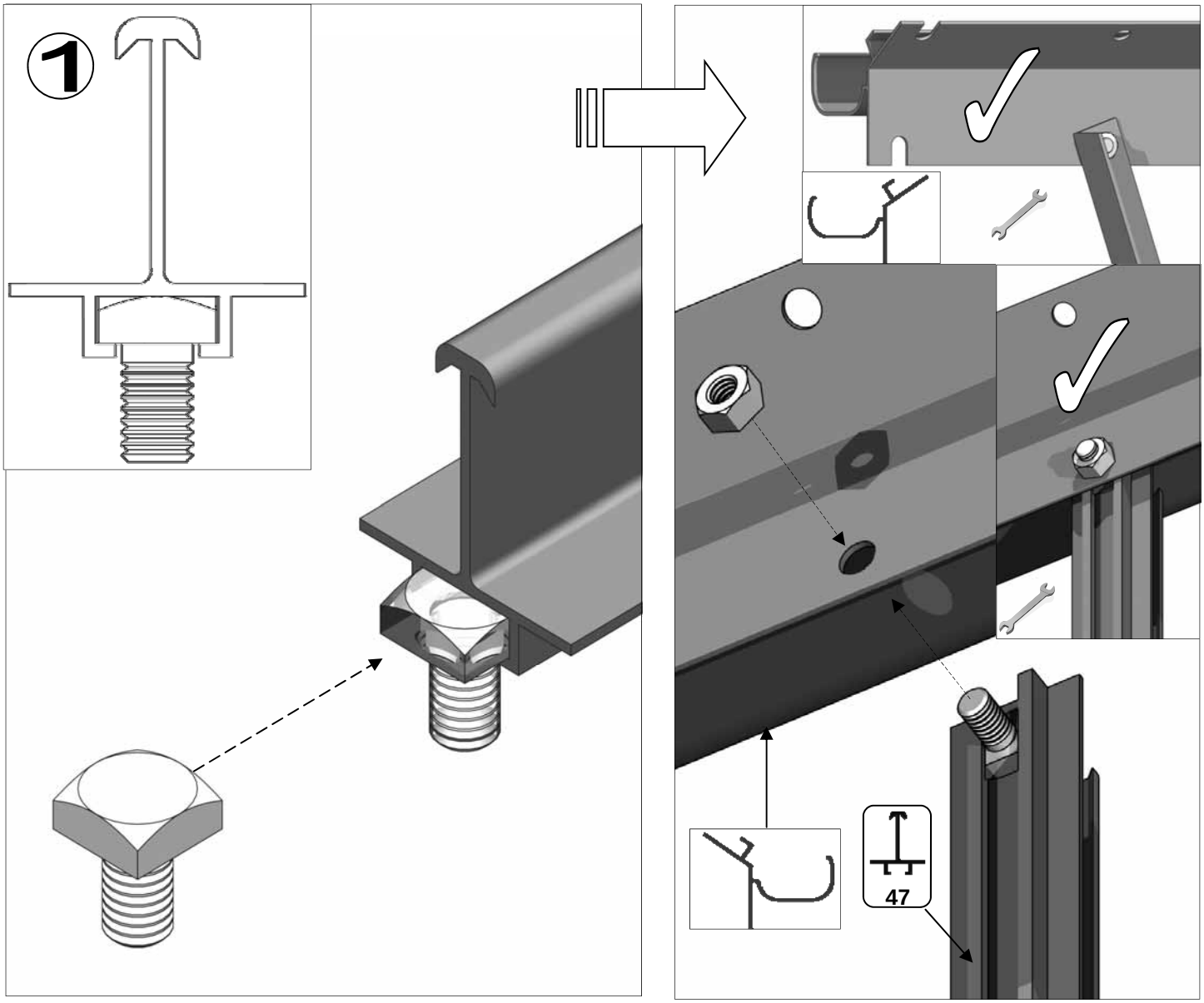
1
47

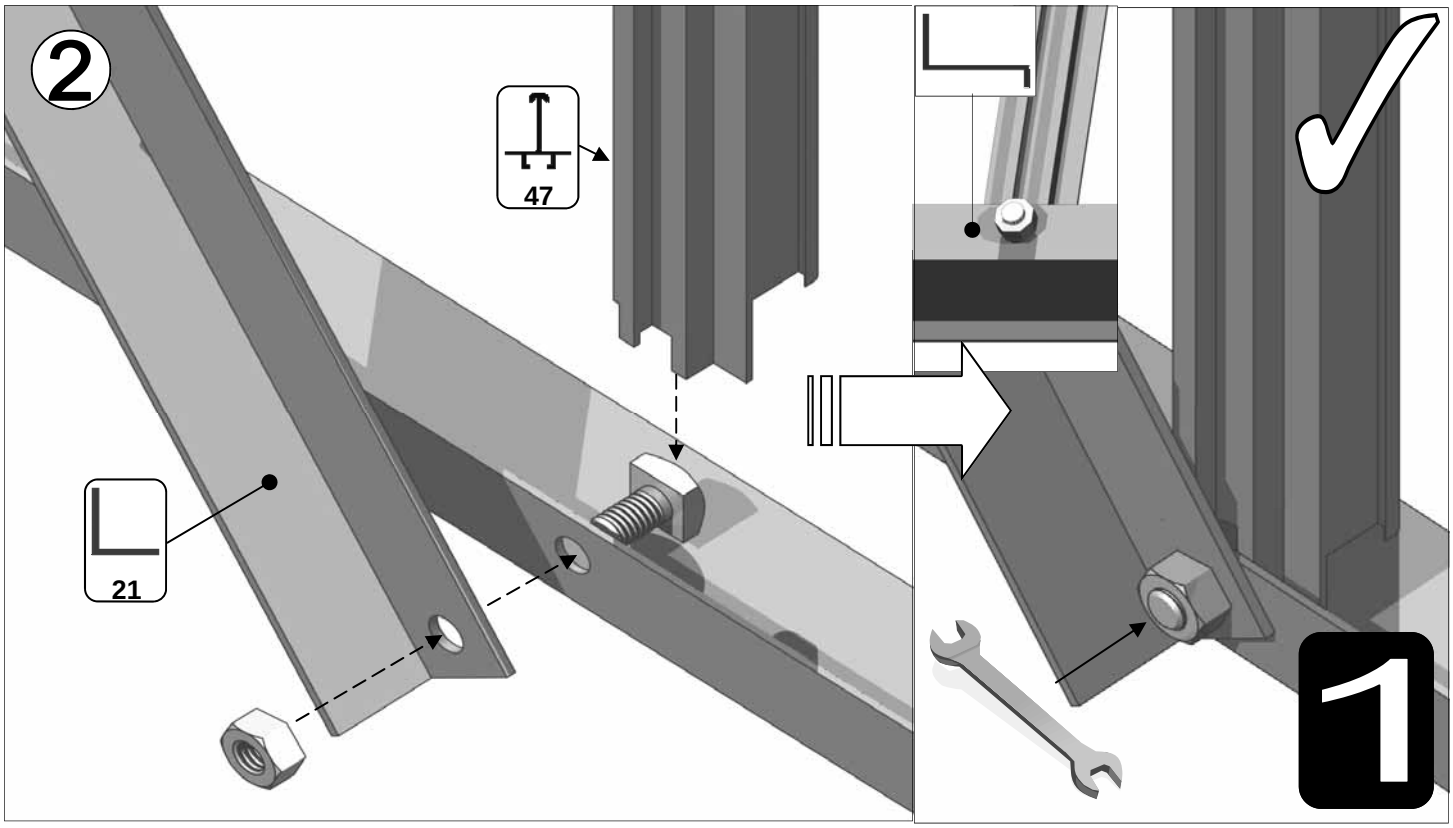
2
47
21
1

Part No	mm	Quantity
42	1730	1
43	1730	1
76	1504	1
77	1504	1
240	2174	1
243	2050	1

Part No	mm	Quantity
244	2050	1
245	1296	1
246	1296	1
249	773	2
285	1647	2

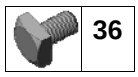
36

M6

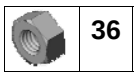
36

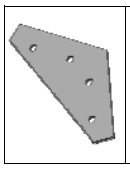
2

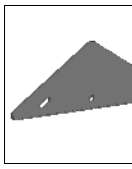
1

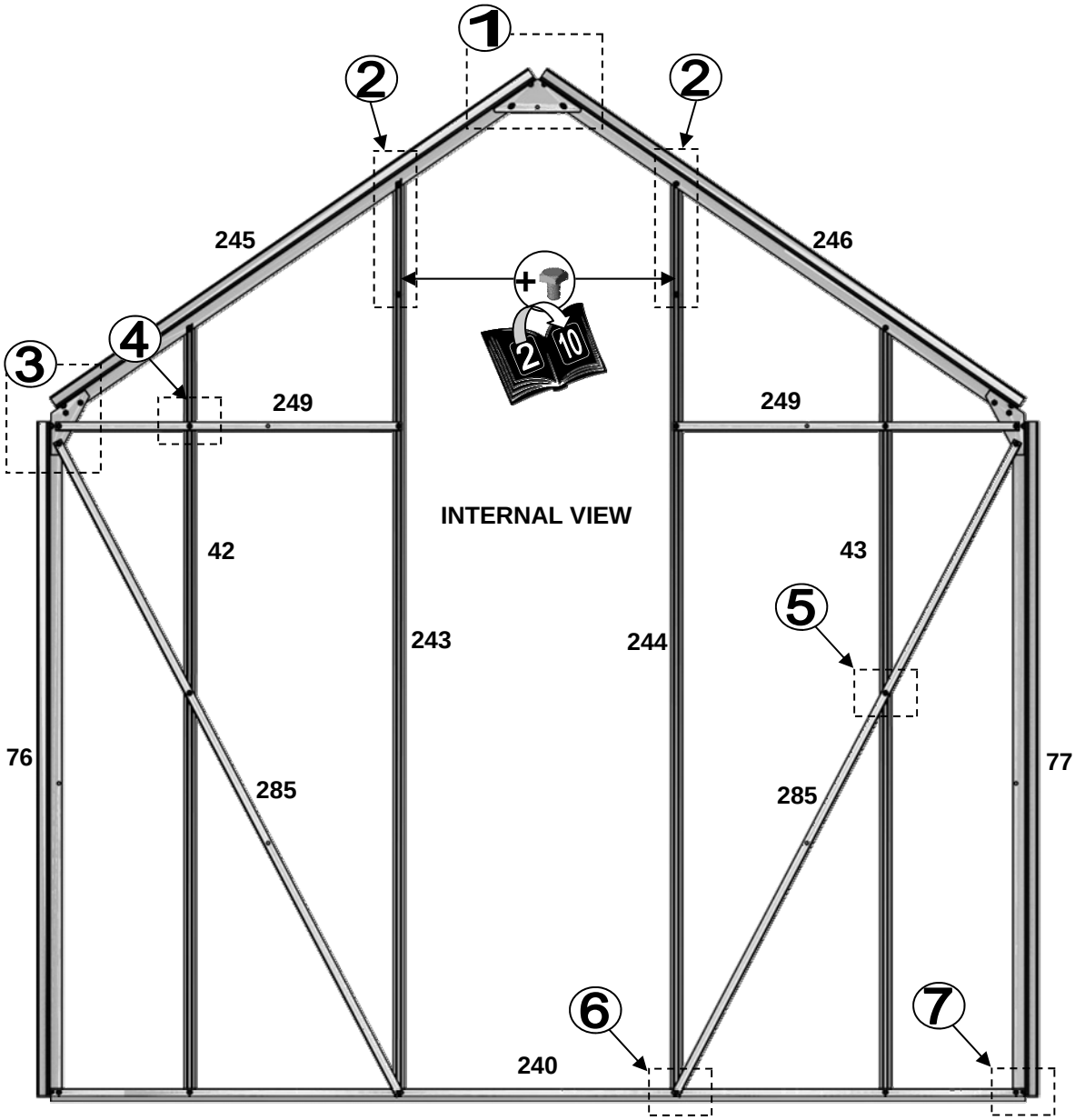

ALL VIEWS INTERNAL

2

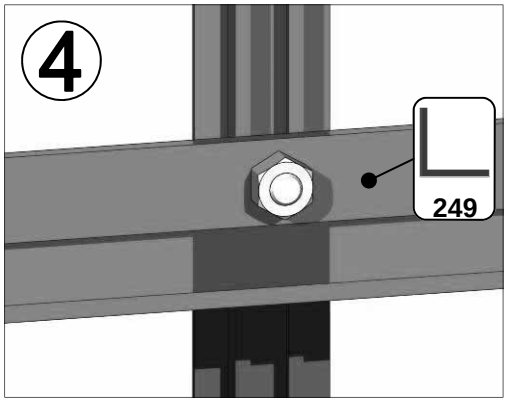

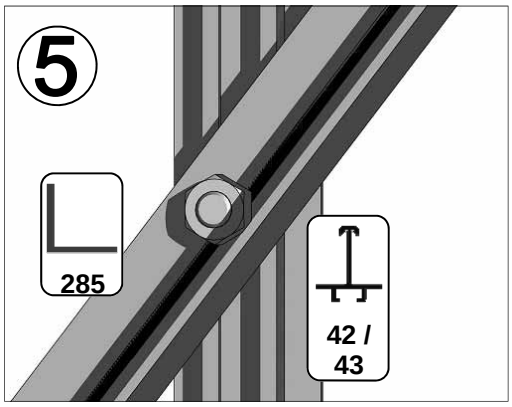

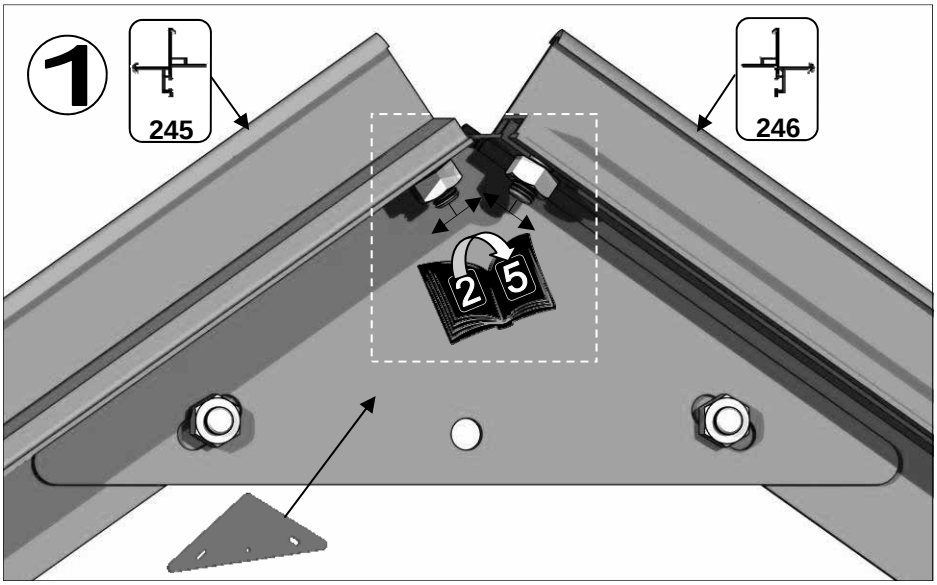

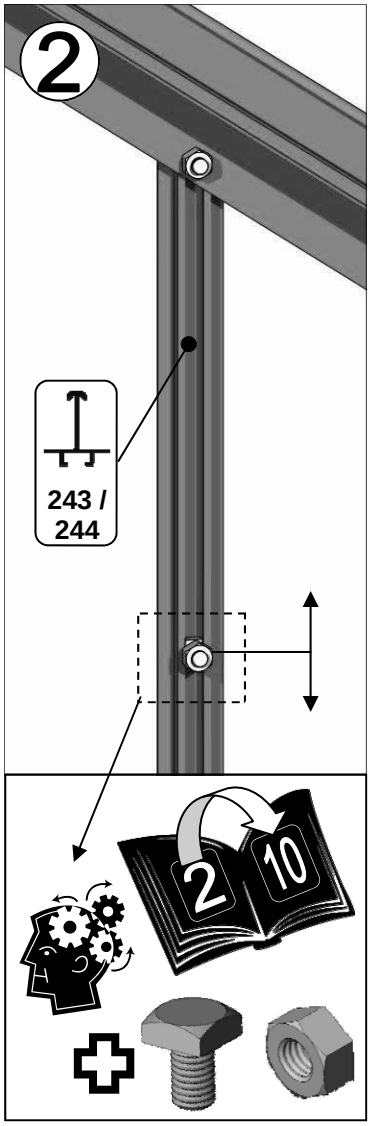

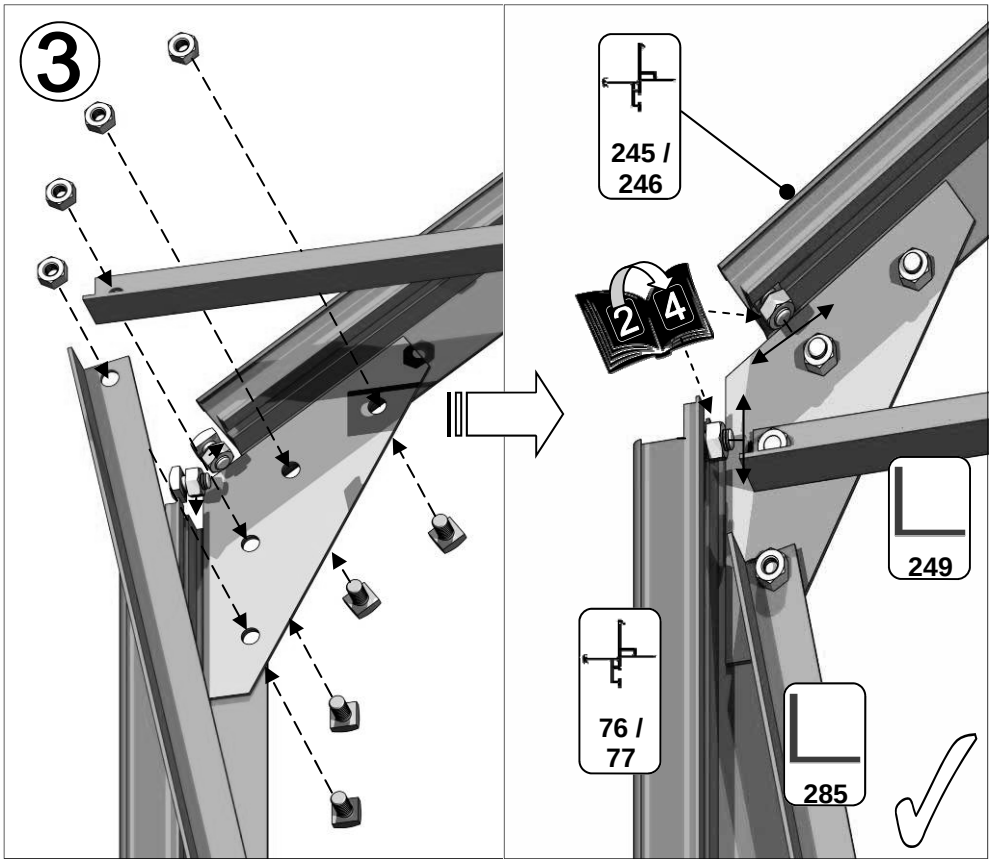

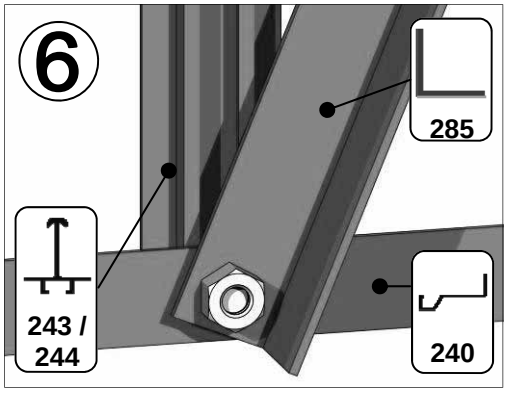

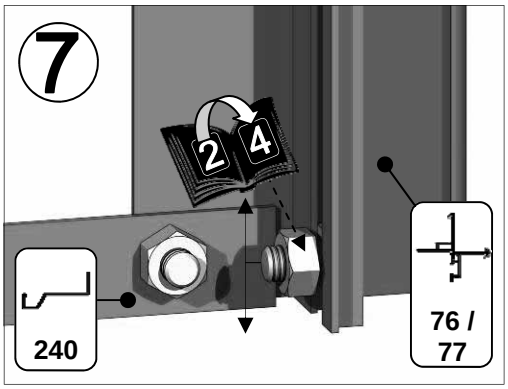

ALL VIEWS INTERNAL

Part No	mm	Quantity
42	1730	1
43	1730	1
76	1504	1
77	1504	1
241	2174	1
242	2154	1

Part No	mm	Quantity
243	2050	1
244	2050	1
245	1296	1
246	1296	1
285	1647	2

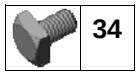
34

M6

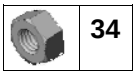
34

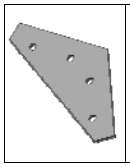
2

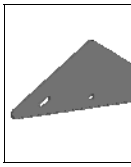
1

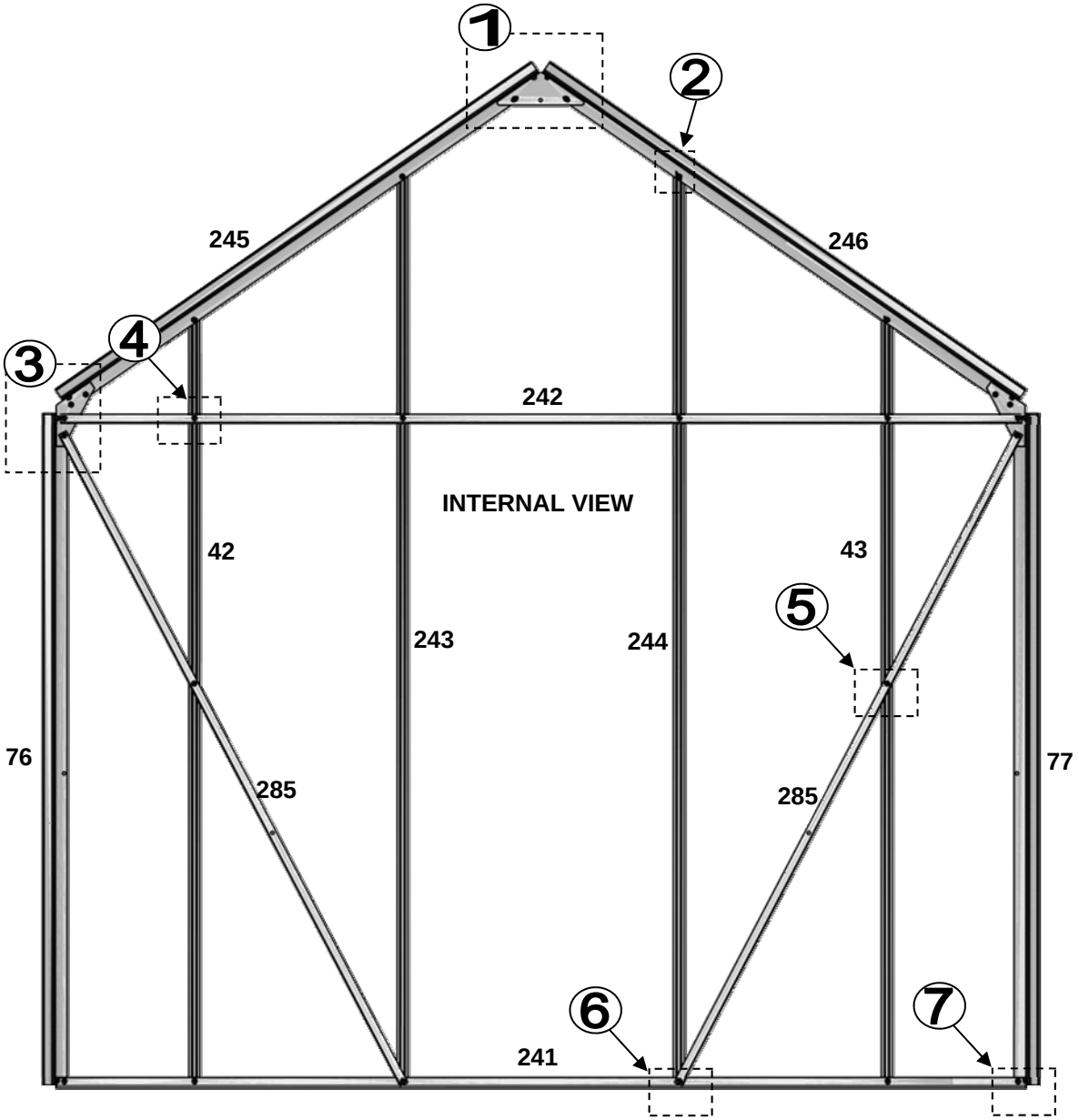

ALL VIEWS
INTERNAL

3

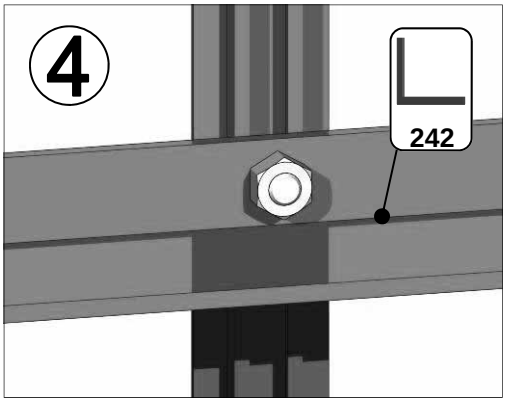

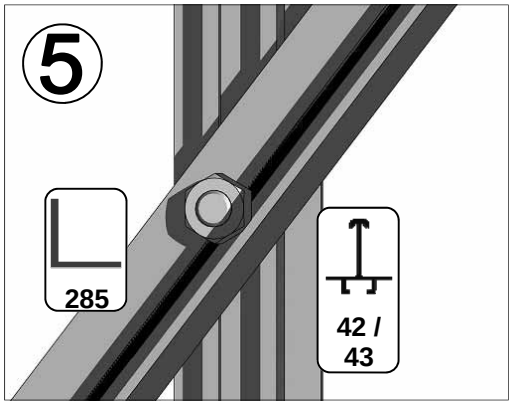

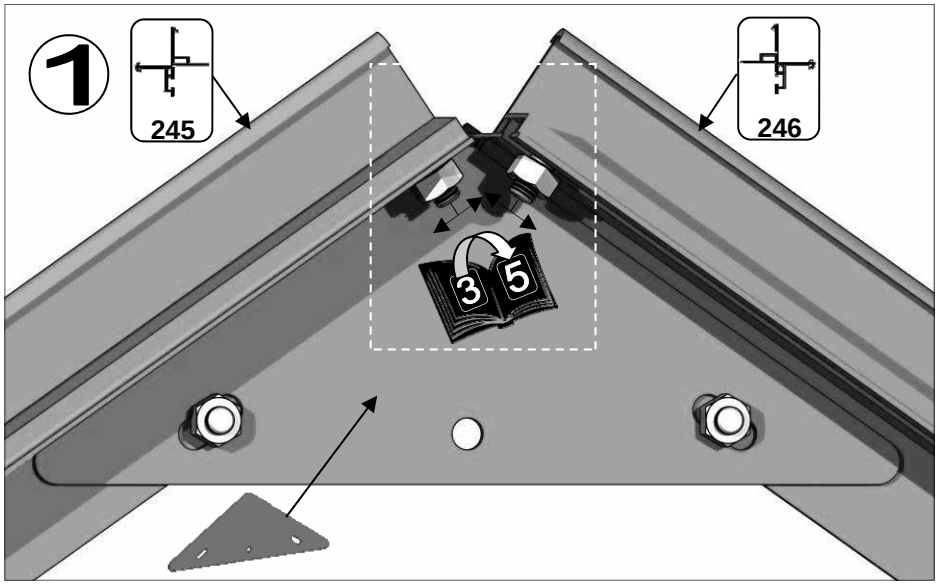

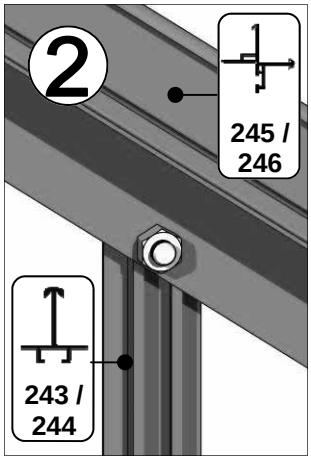

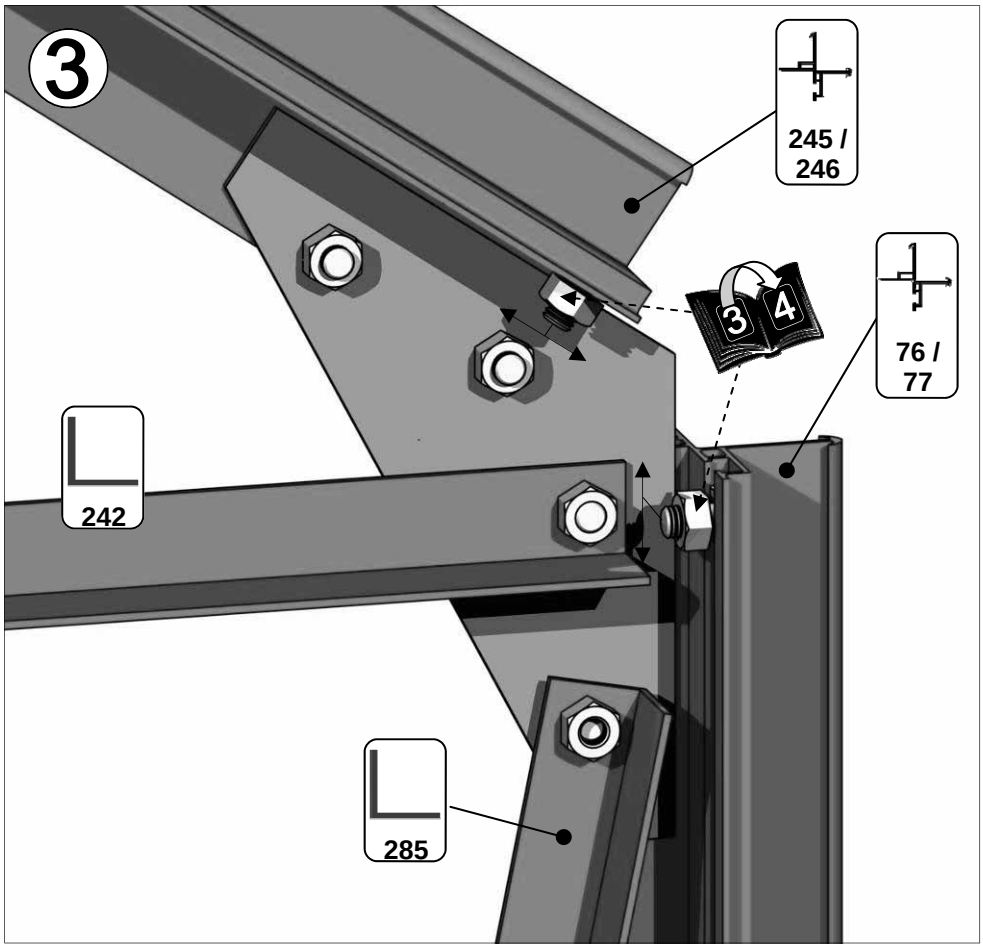

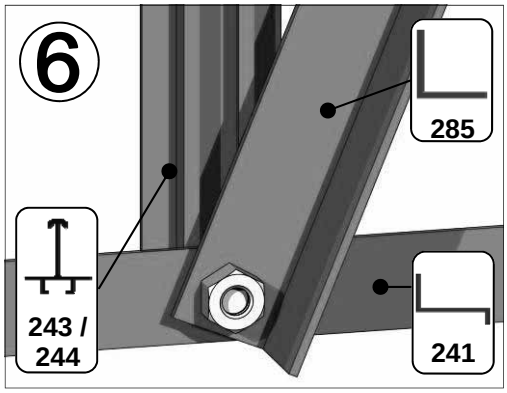

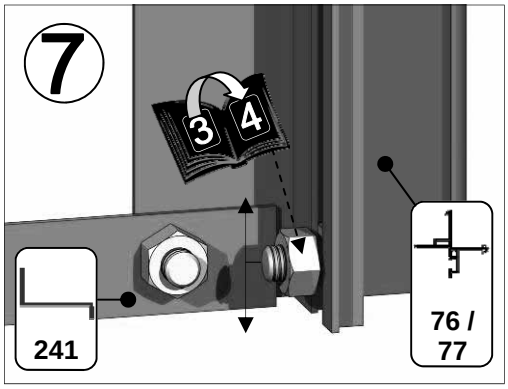

ALL VIEWS INTERNAL

3

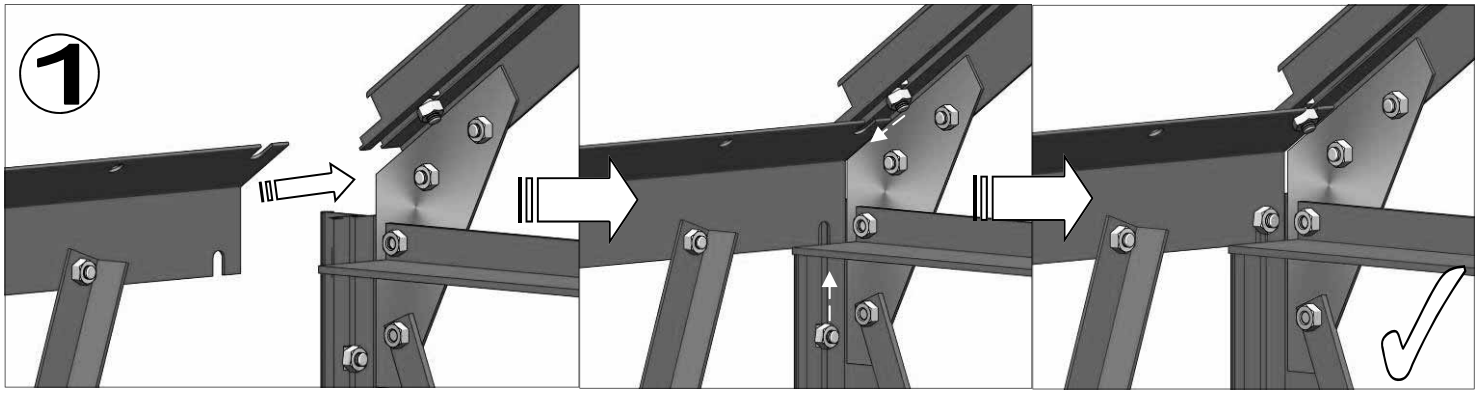
1

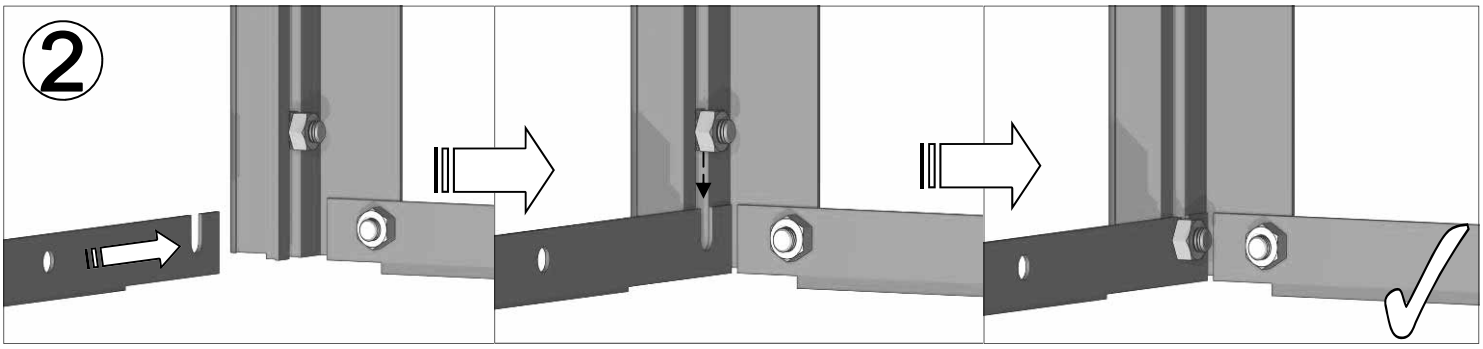
2

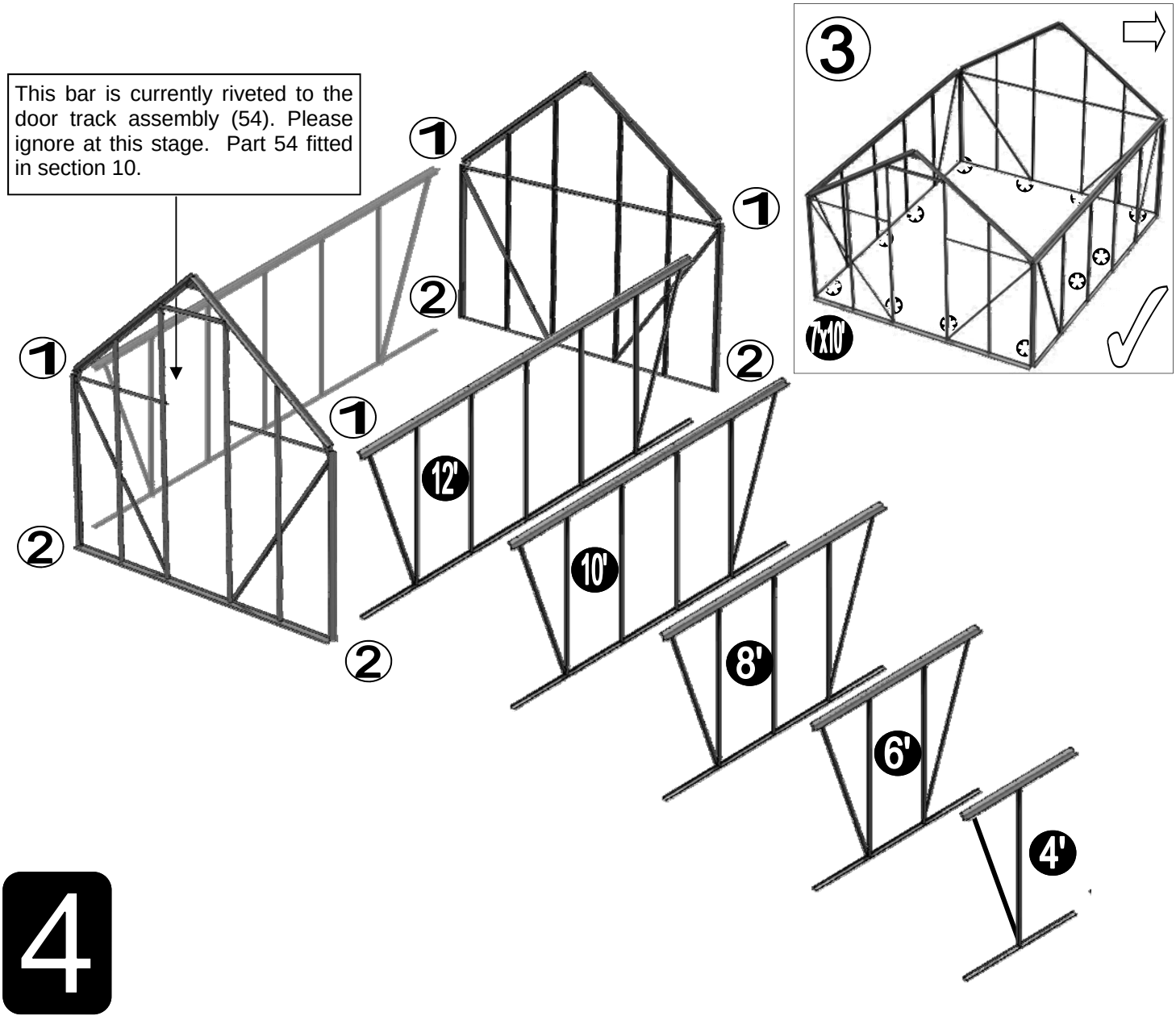
This bar is currently riveted to the door track assembly (54). Please ignore at this stage. Part 54 fitted in section 10.
1
2
12'
10'
8'
6'
4'
3
7'x10'

4

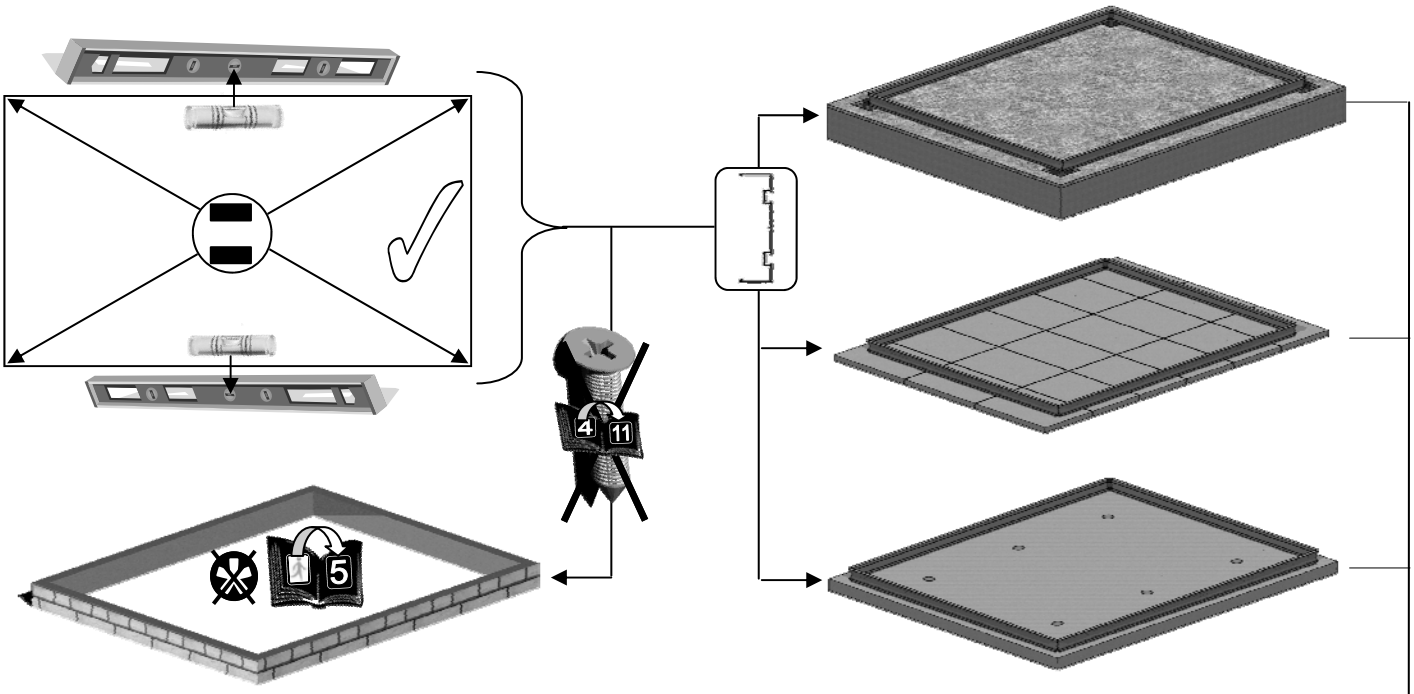

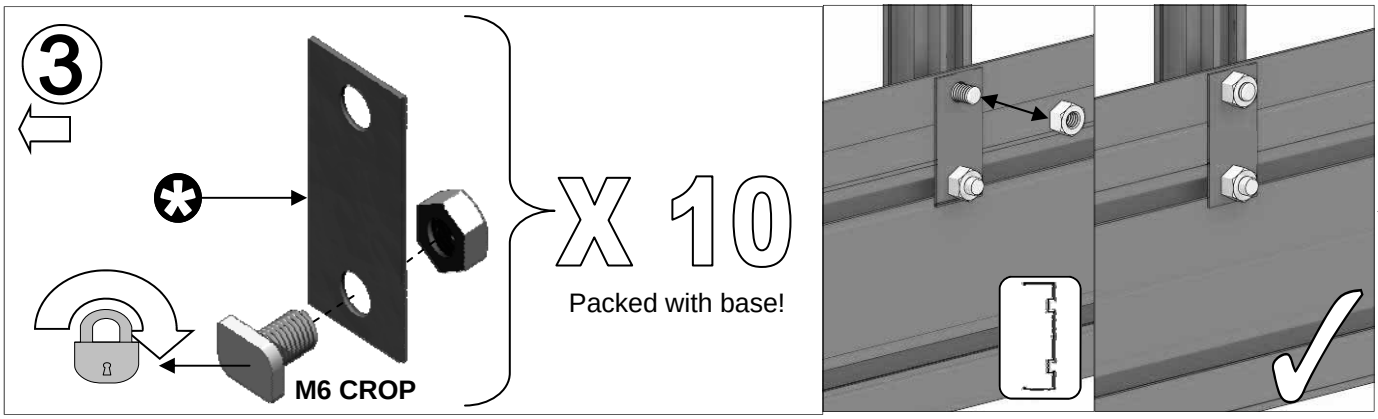

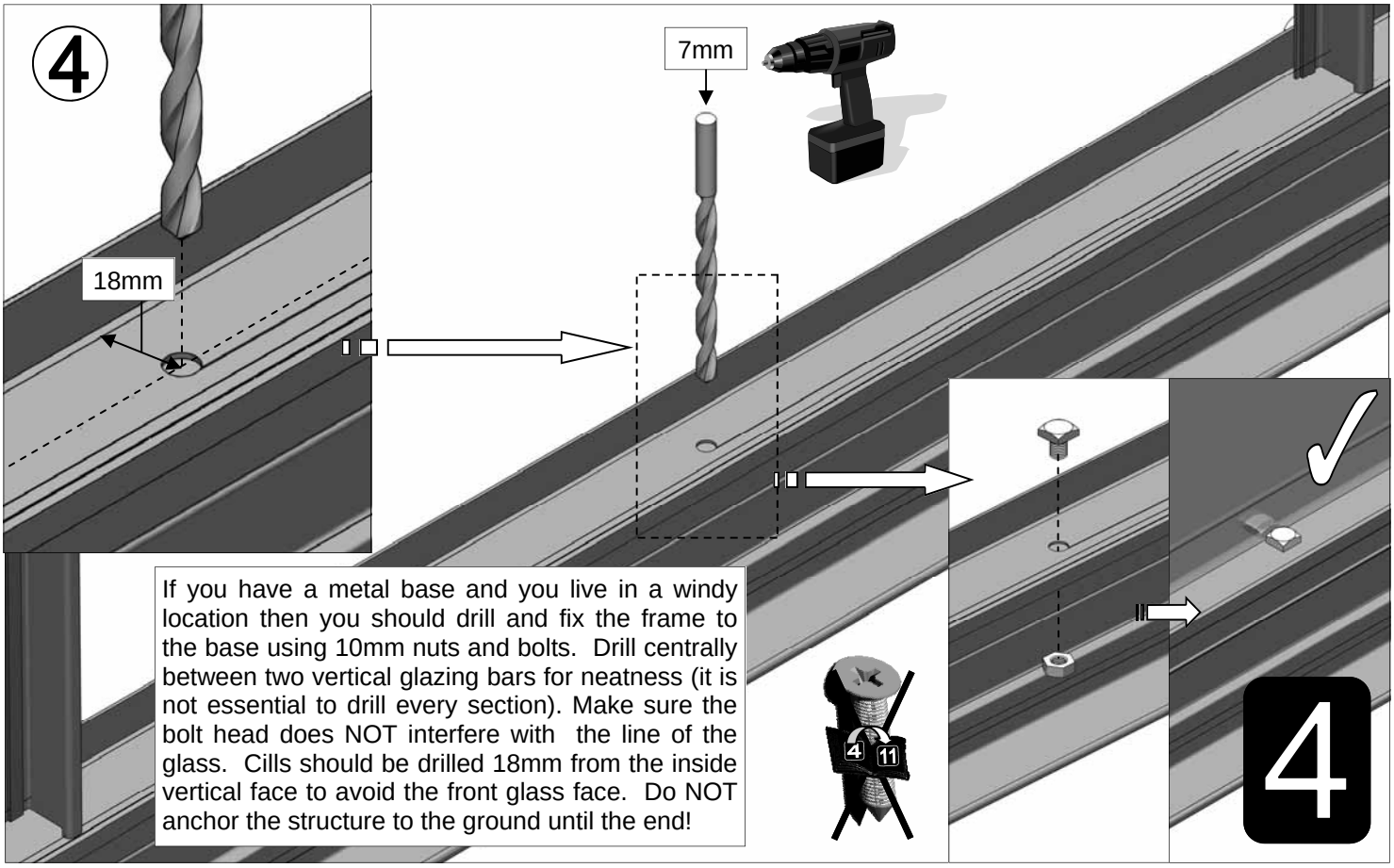

If you have a metal base and you live in a windy location then you should drill and fix the frame to the base using 10mm nuts and bolts. Drill centrally between two vertical glazing bars for neatness (it is not essential to drill every section). Make sure the bolt head does NOT interfere with the line of the glass. Cills should be drilled 18mm from the inside vertical face to avoid the front glass face. Do NOT anchor the structure to the ground until the end!

4’	Part No	mm	Quantity
	57	1240	1
	247	1305	2
	248	1390	2
7 / 1	85	628	1

6’	Part No	mm	Quantity
	26	1860	1
	247	1305	4
14	248	1390	4
	93	636	1

8’	Part No	mm	Quantity
	12	2480	1
	247	1305	6
20	248	1390	4
	93	636	2
	139 / 600	608	1

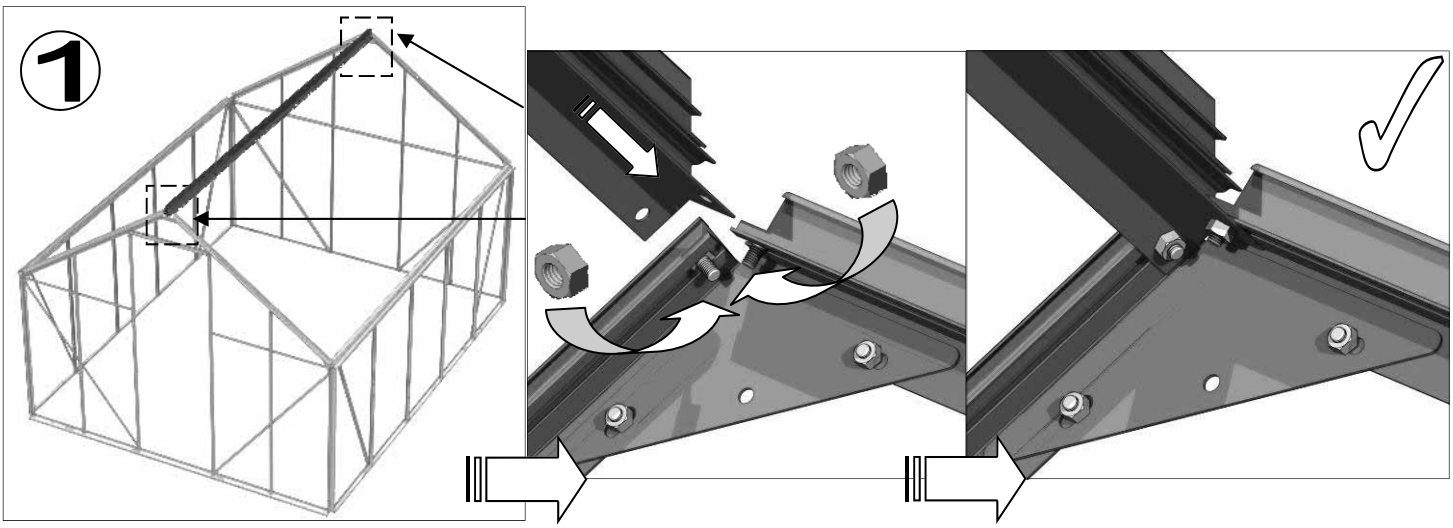

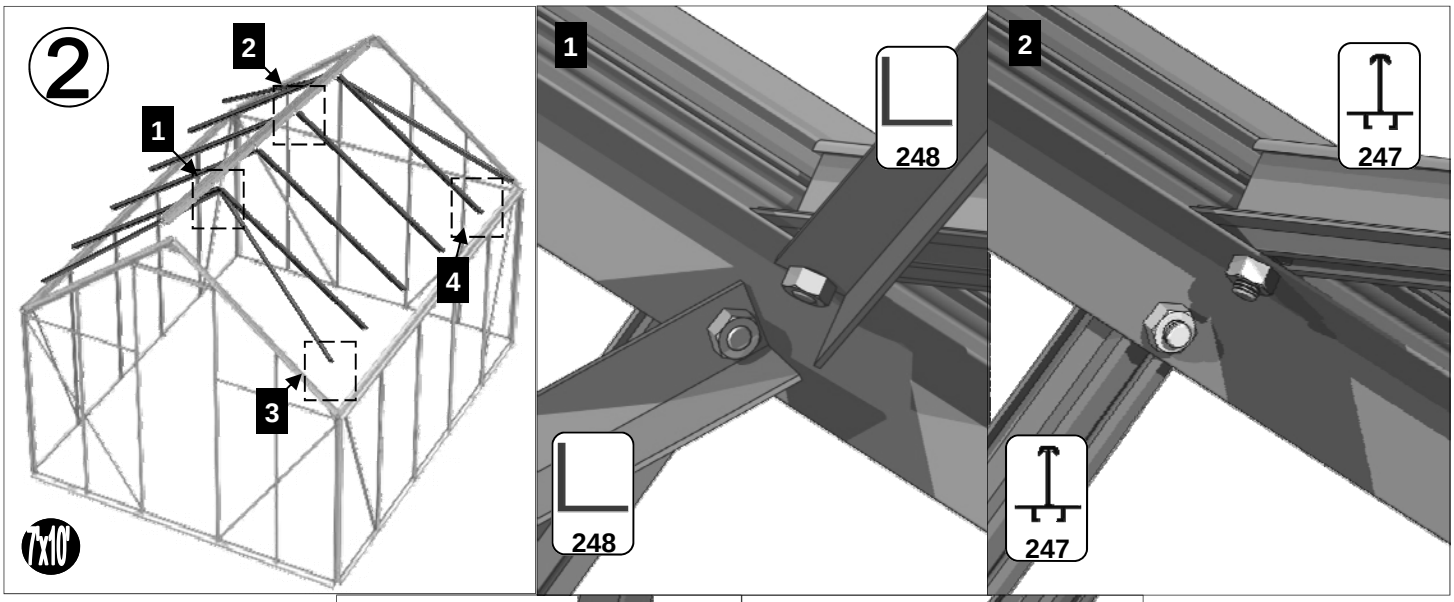

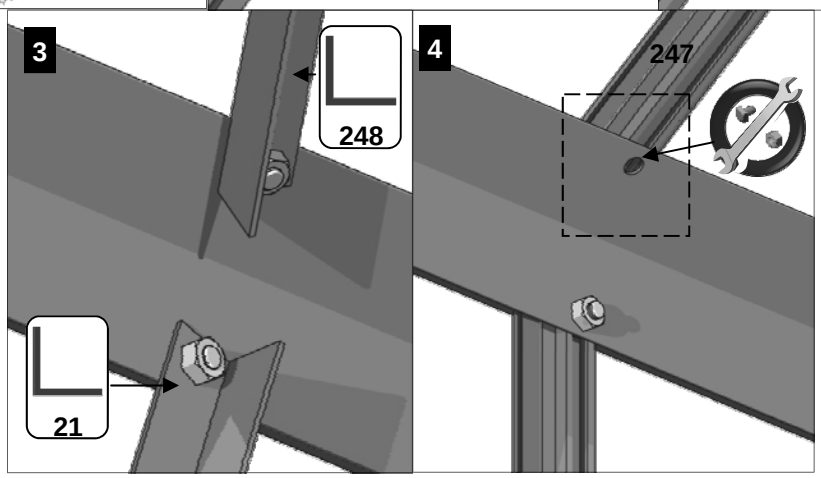

5

10’	Part No	mm	Quantity
	6	3100	1
	247	1305	8
28	248	1390	4
	93	636	2
	139 / 600	608	2

12’	Part No	mm	Quantity
	2	3720	1
	247	1305	10
34	248	1390	4
	93	636	2
	139 / 600	608	3

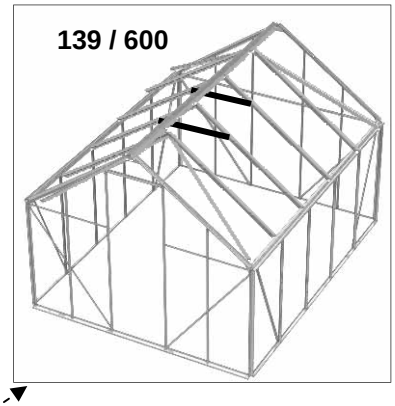

e.g.

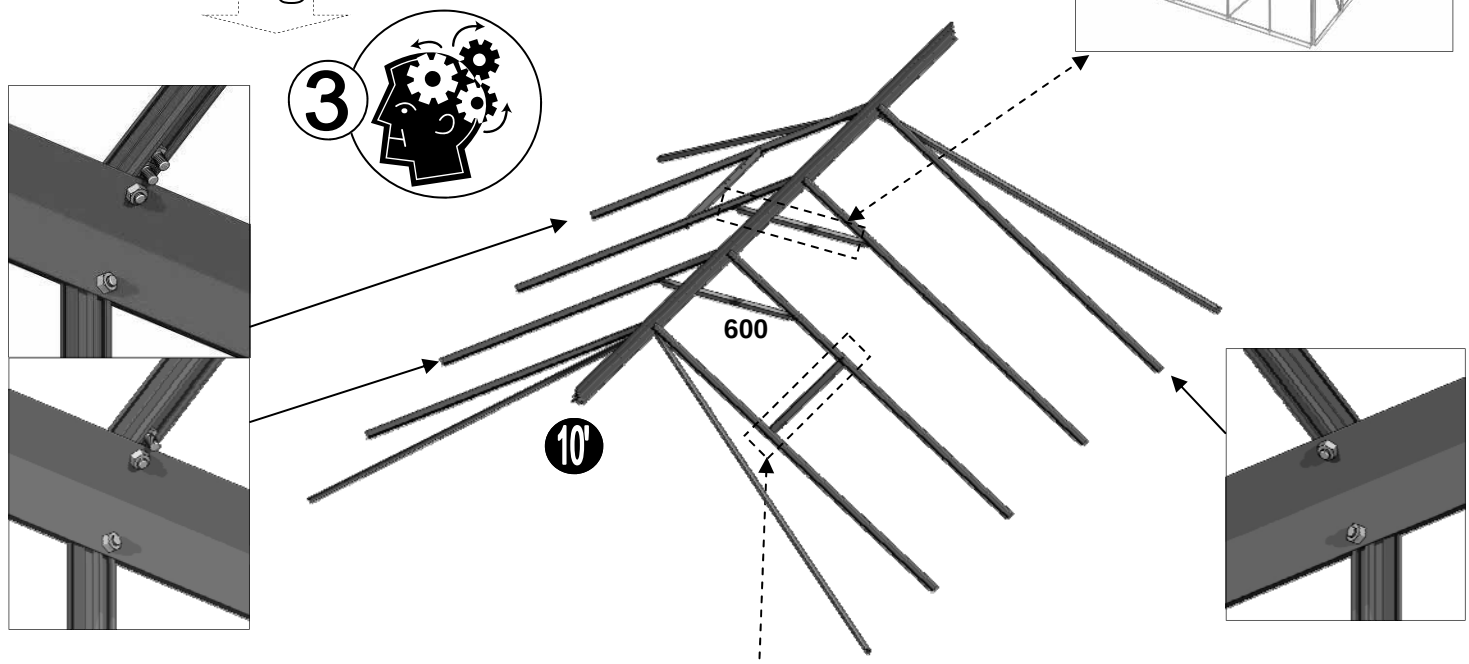

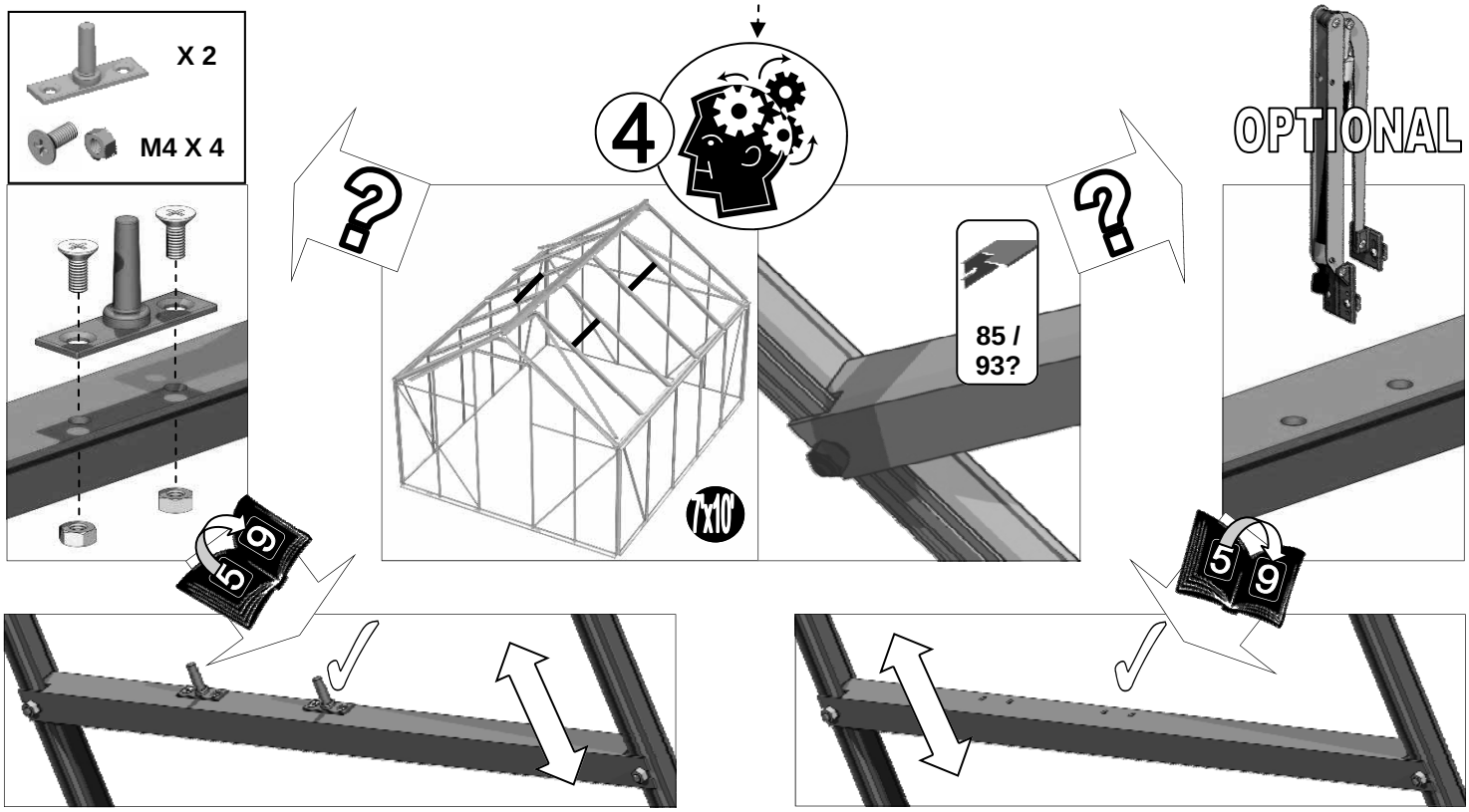

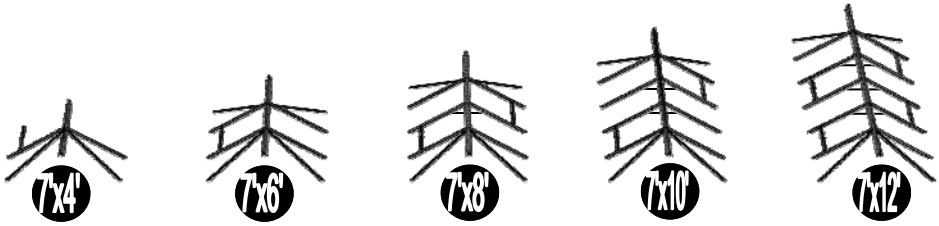

5

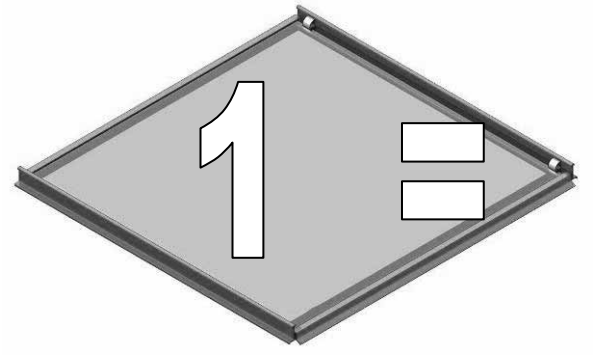

Part No	mm	Quantity
121	612	1
123	612	1
124	610	2

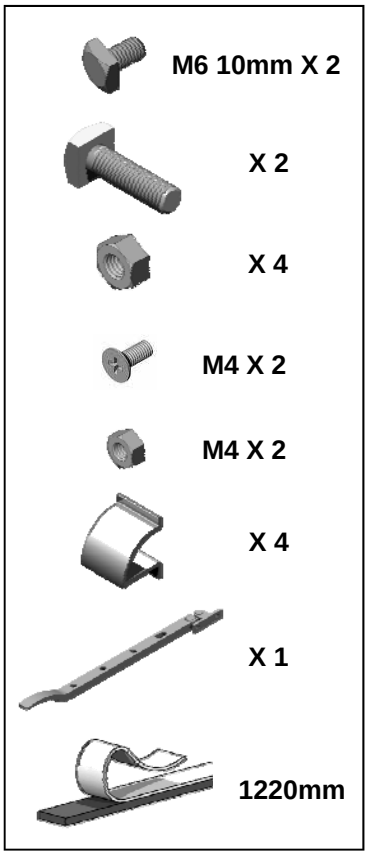

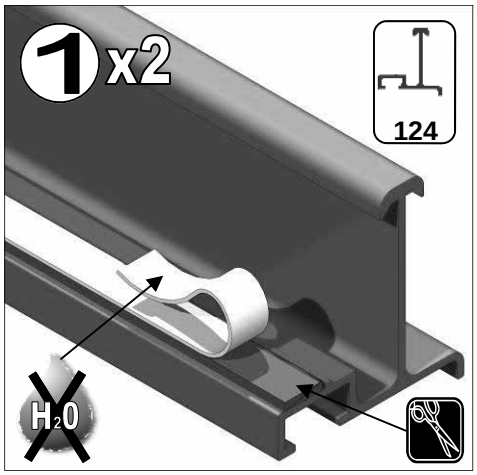

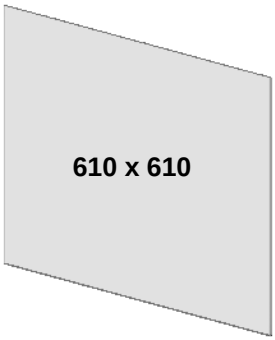

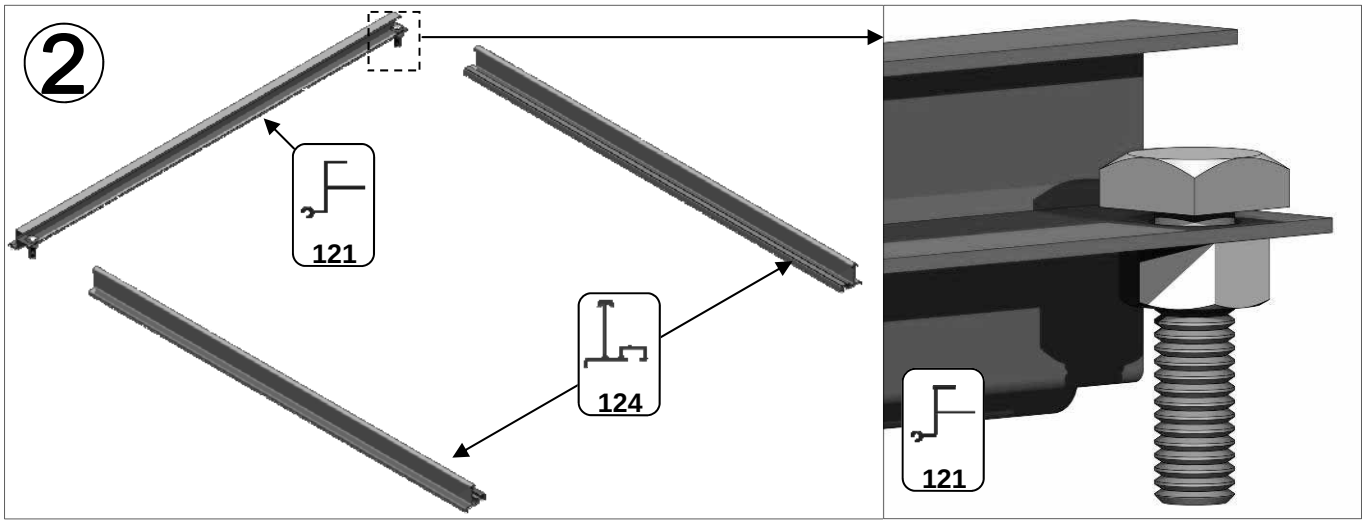

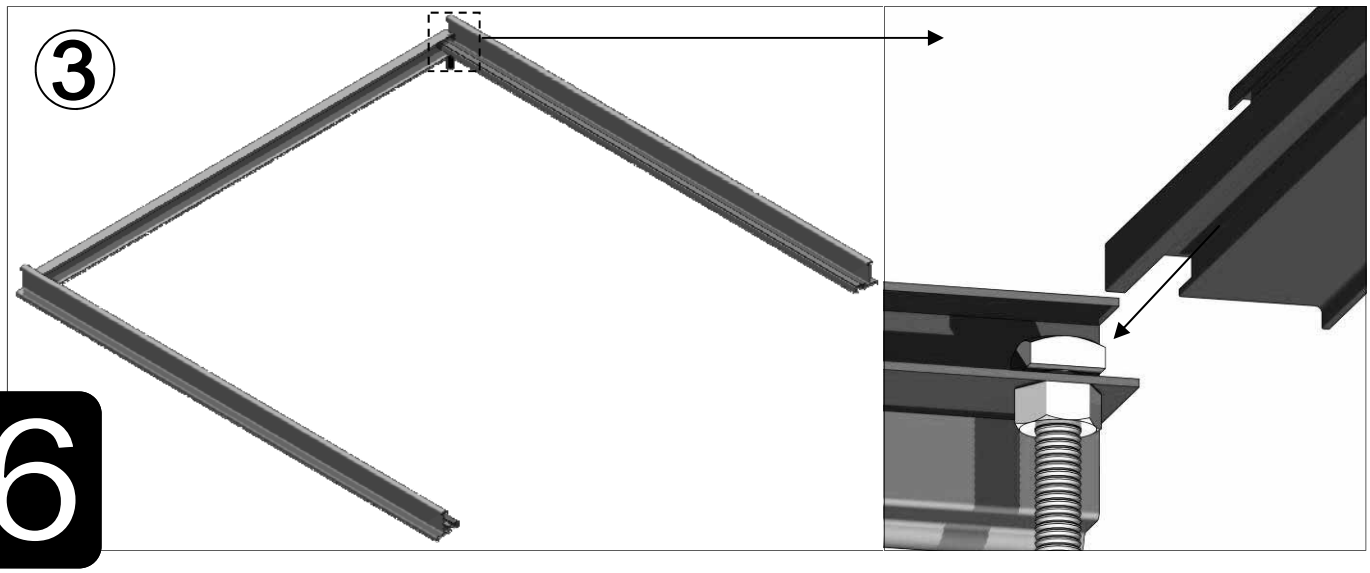

6

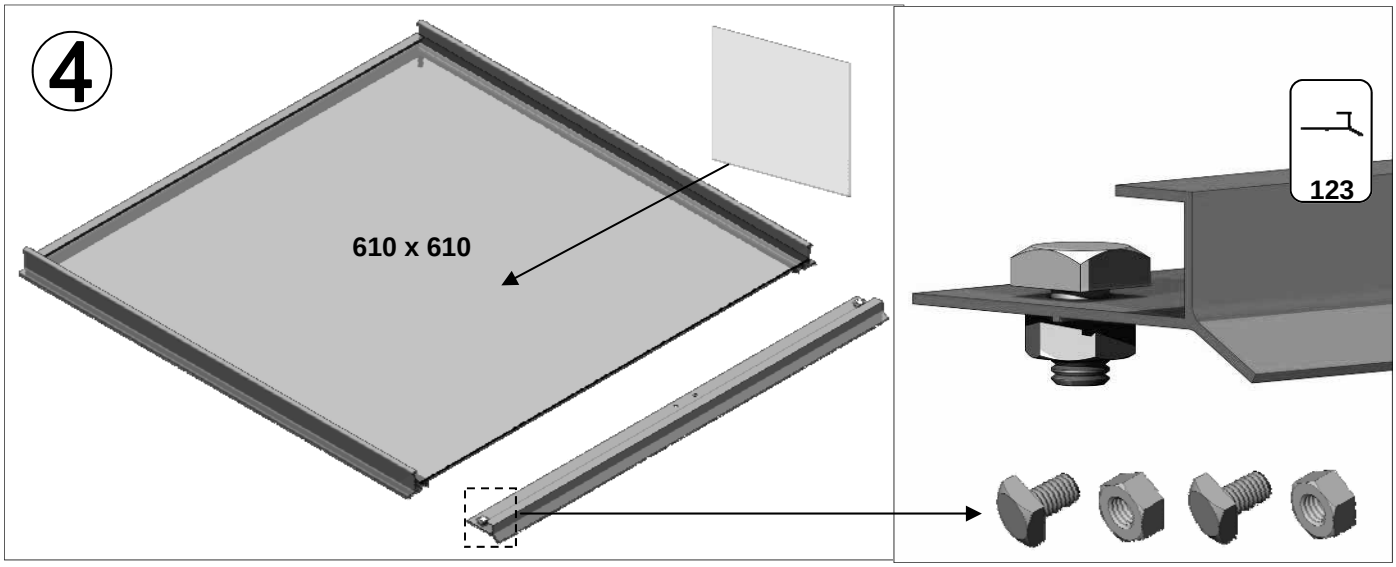

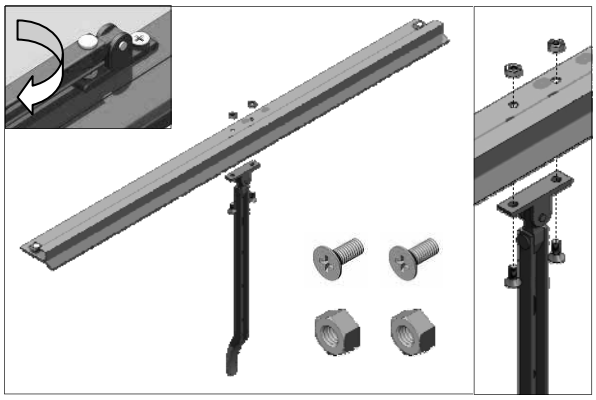

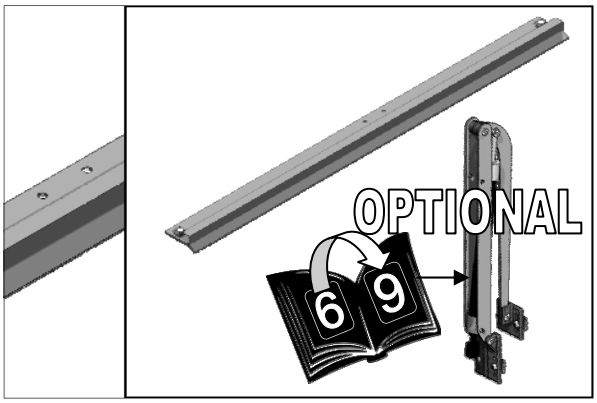

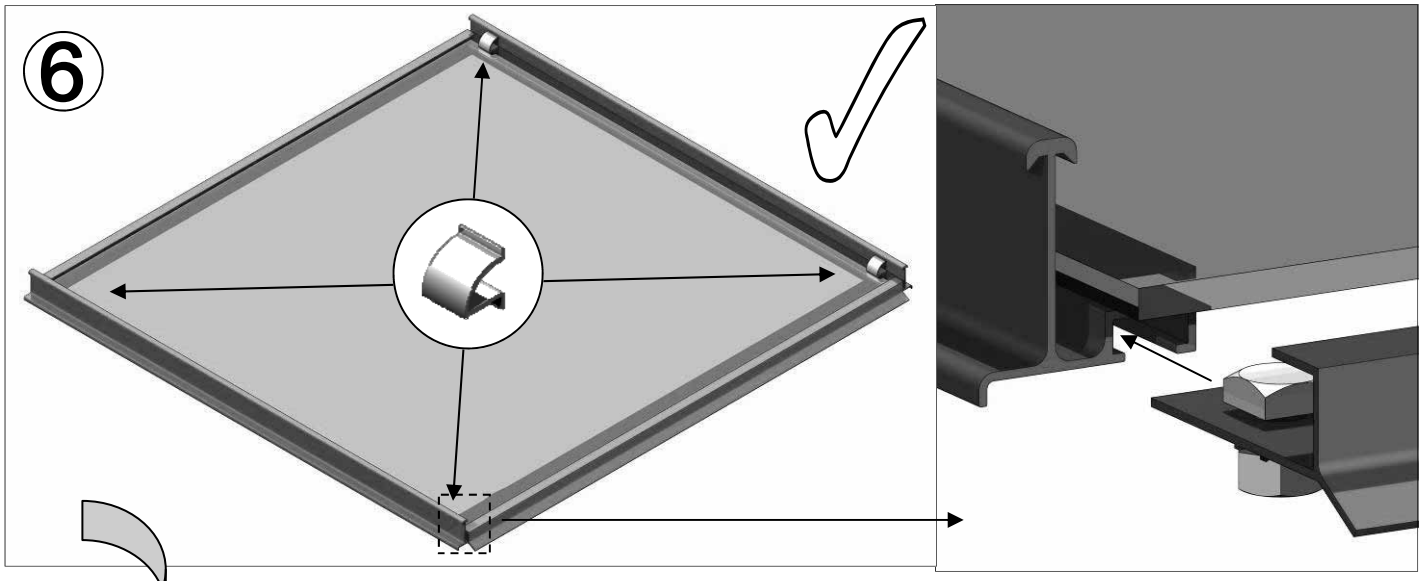

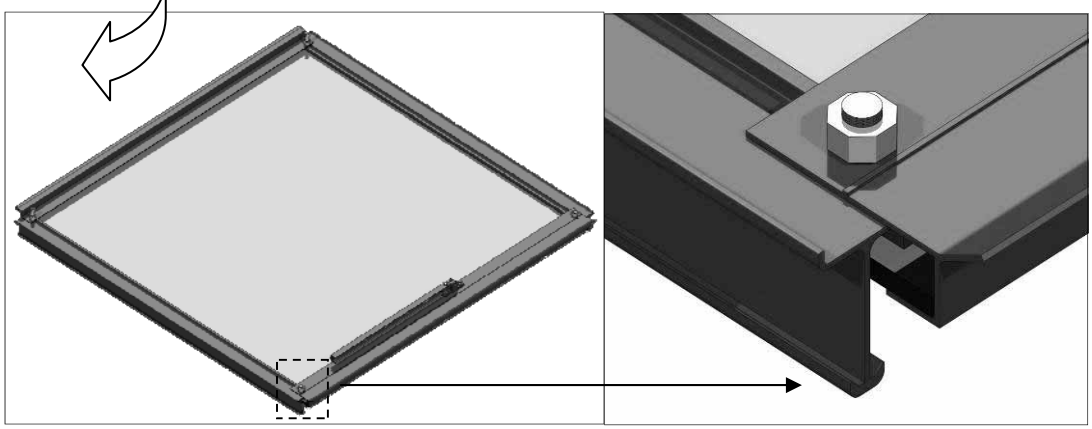

6

Part No	mm	Quantity
41	1763	2
95	614	1
130	619	4
137	883	2

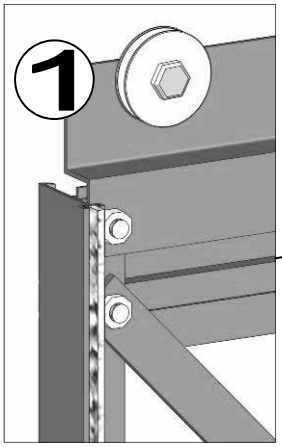

Please note that you may need to change the orientation of the diagonal flat bar braces in your door/s to make fitting your door stop easier. i.e. the diagonals can be fitted in either orientation.

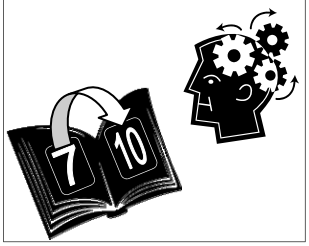

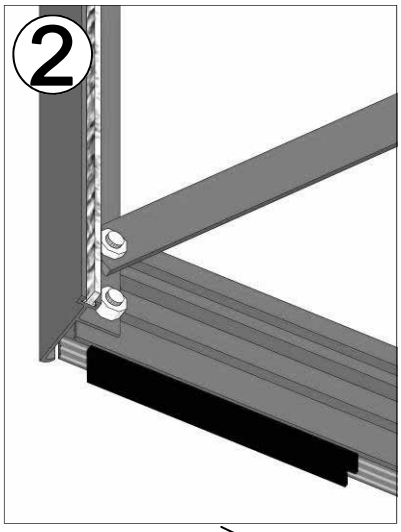

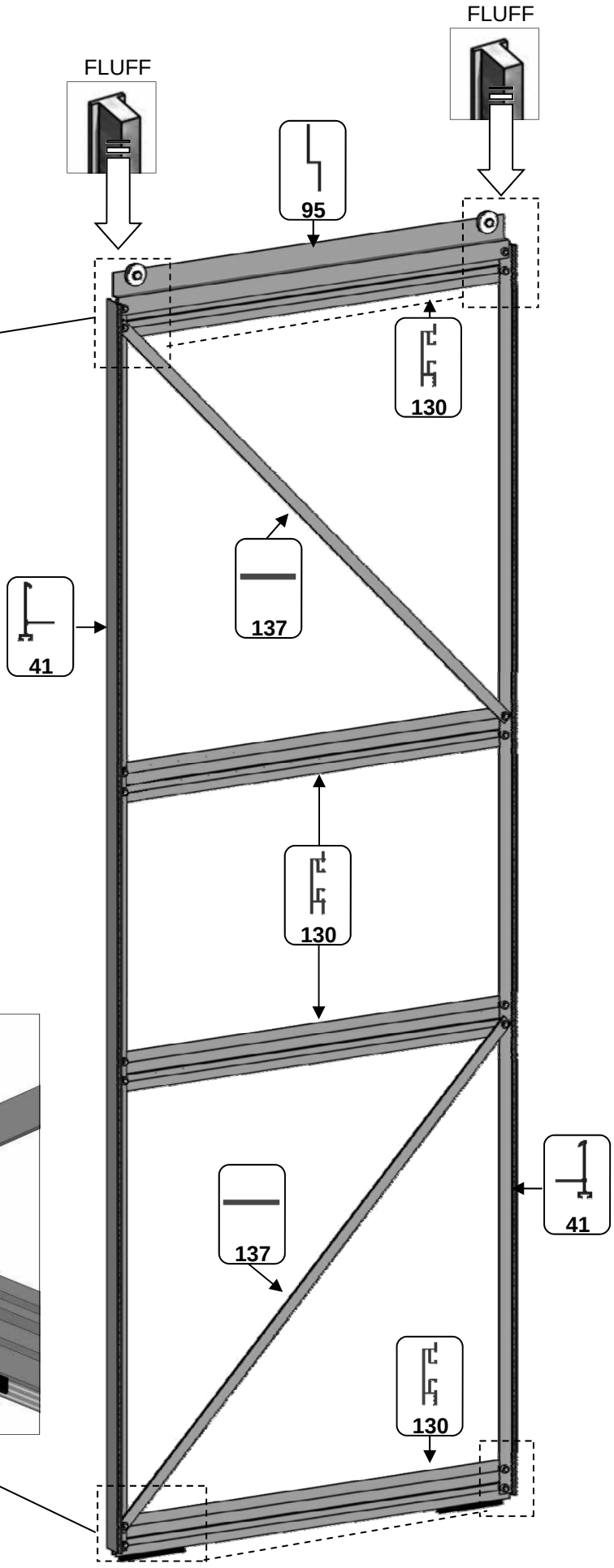

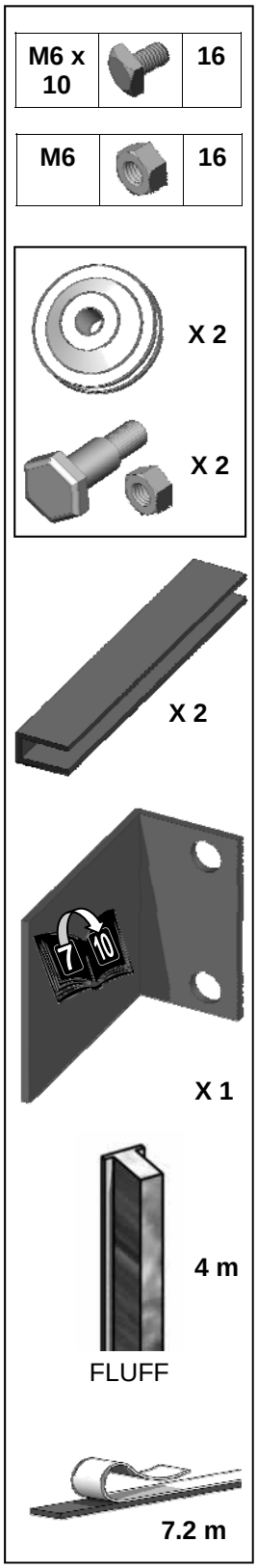

7

ALL VIEWS INTERNAL

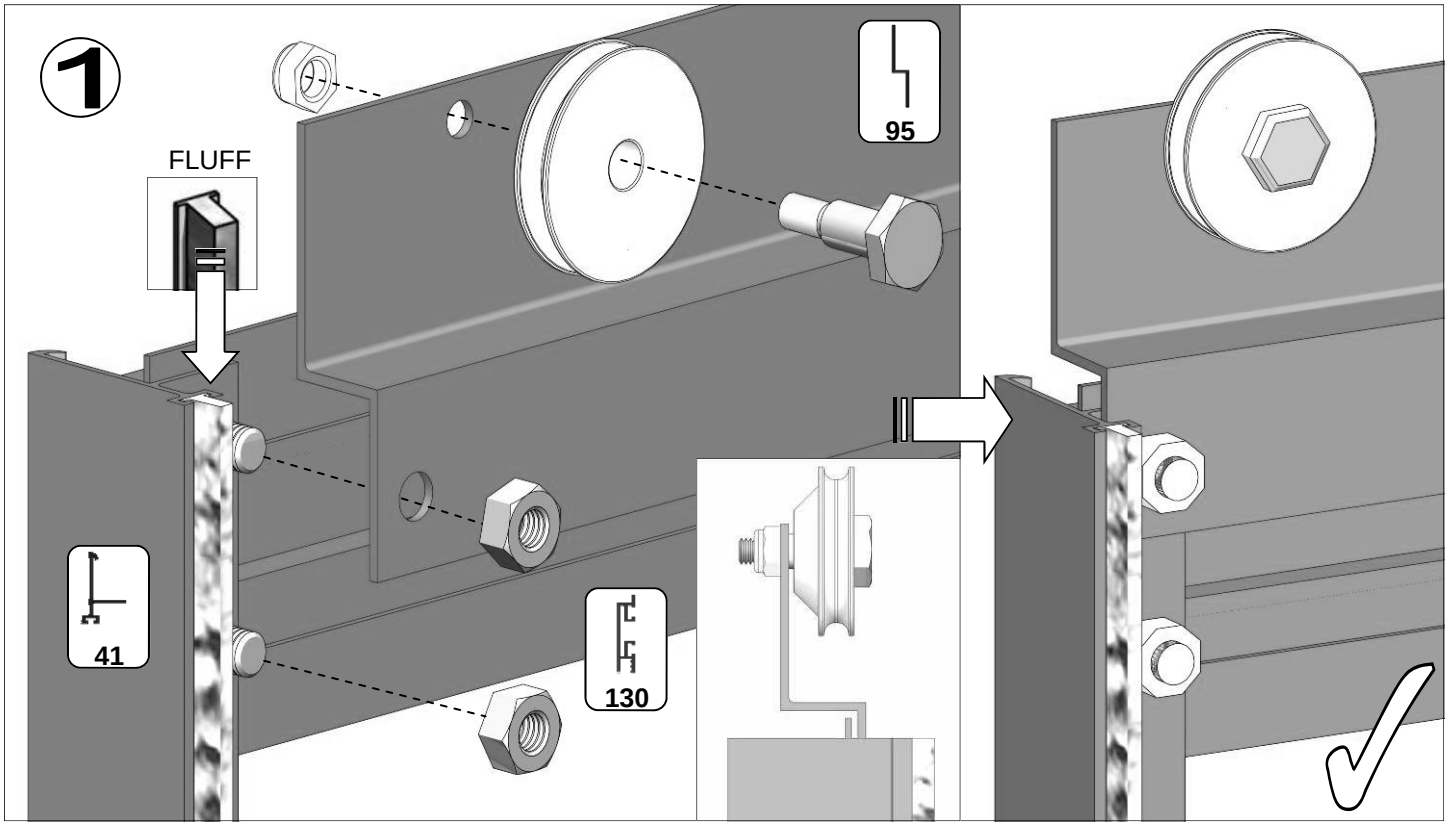

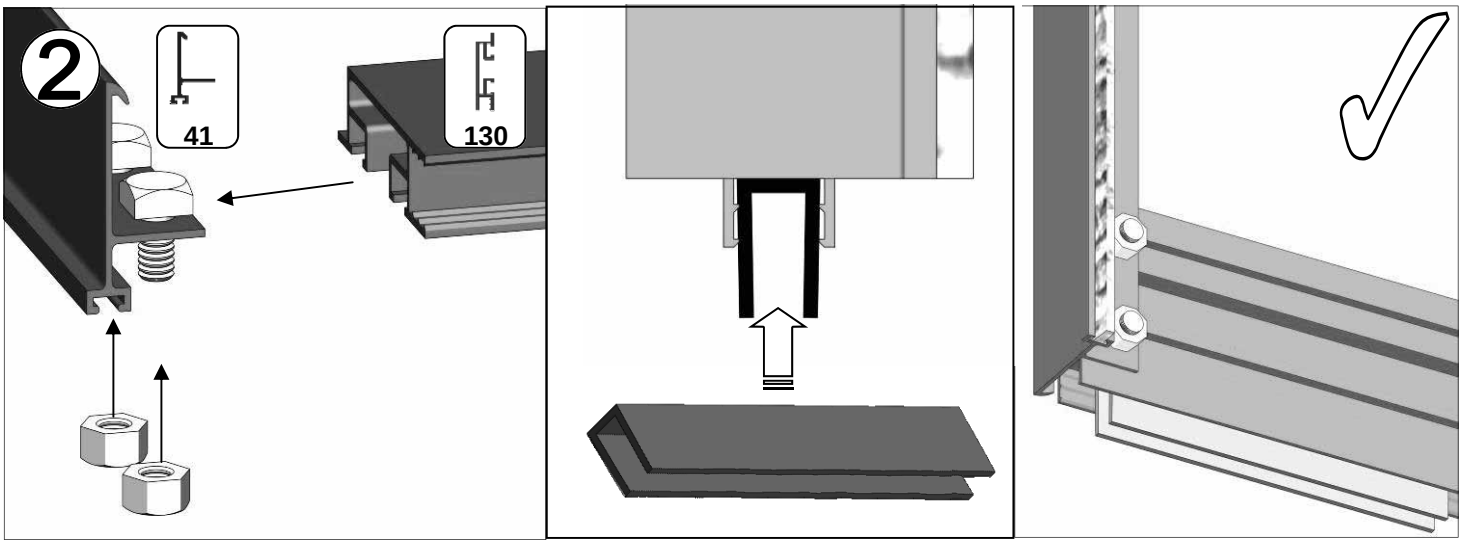

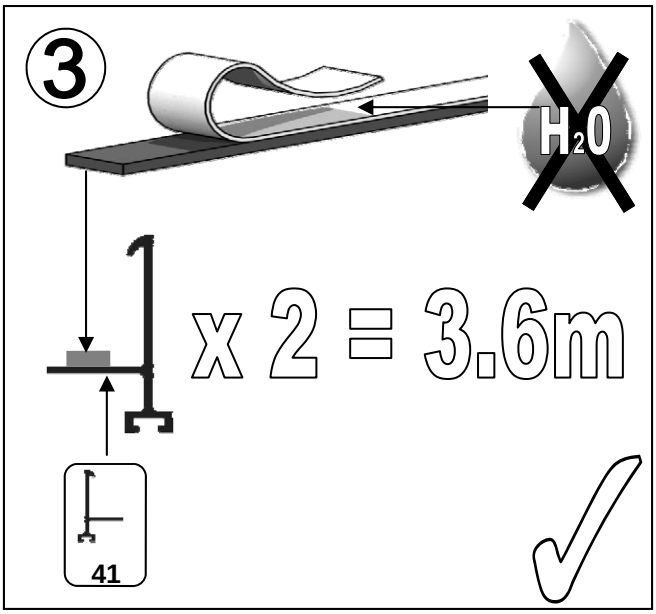

Glazing tips for sections 7 & 8:

- The foam (see left) goes longitudinally in three sections on each door stile and all over the greenhouse frame, see overleaf, including the roof corner bars. It never goes horizontally, the glass just sits directly onto the aluminium cills in the sides.
- Remove the white paper on the foam before it gets wet as it is difficult to remove, i.e. it comes off in small pieces.
- Clips (see overleaf) go roughly 1 every 305mm (1') e.g. 610 x 610 pane you would have 2 per side.

7

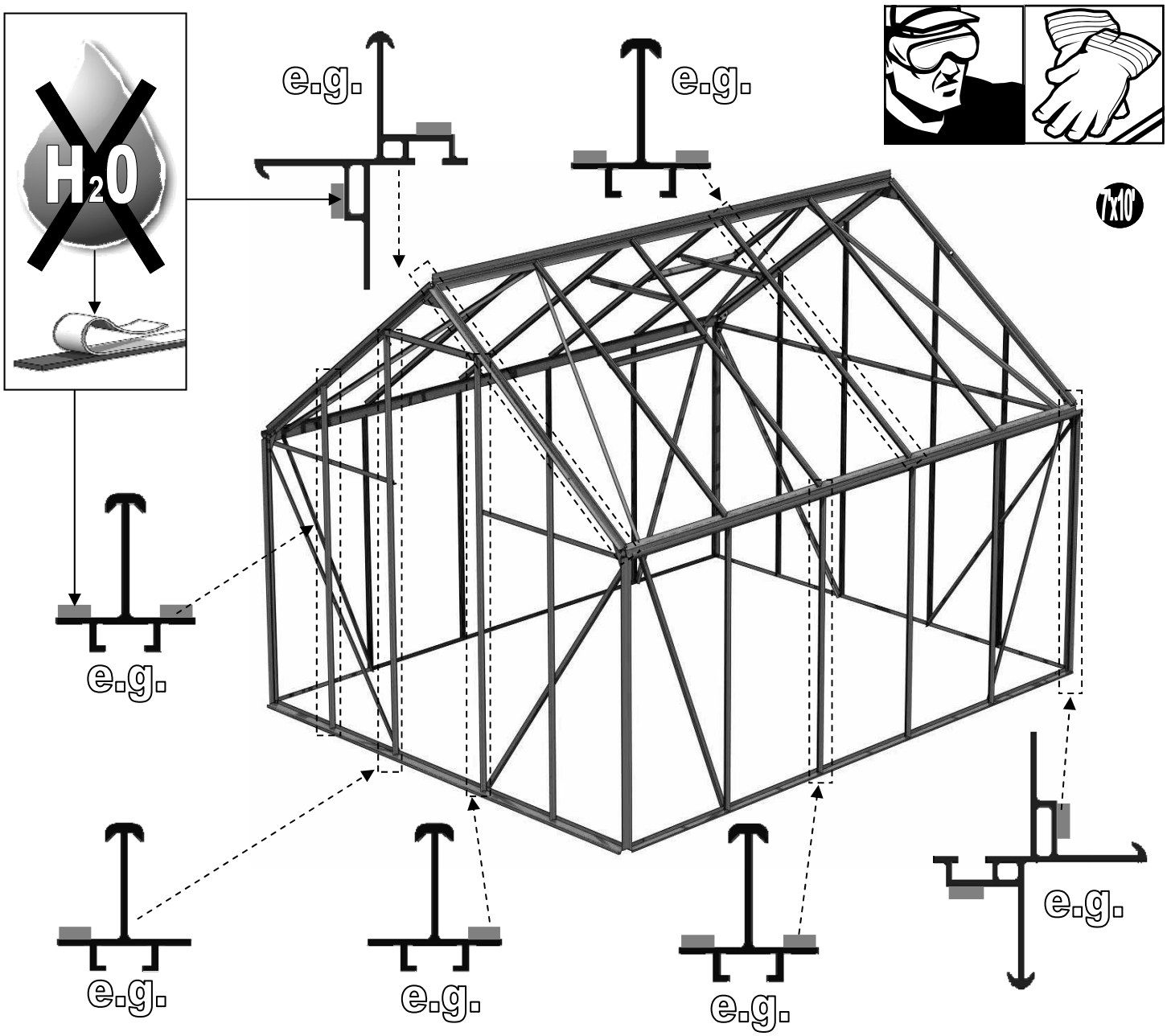
H2O
e.g.
e.g.
7x10'
e.g.
e.g.
e.g.
e.g.
e.g.

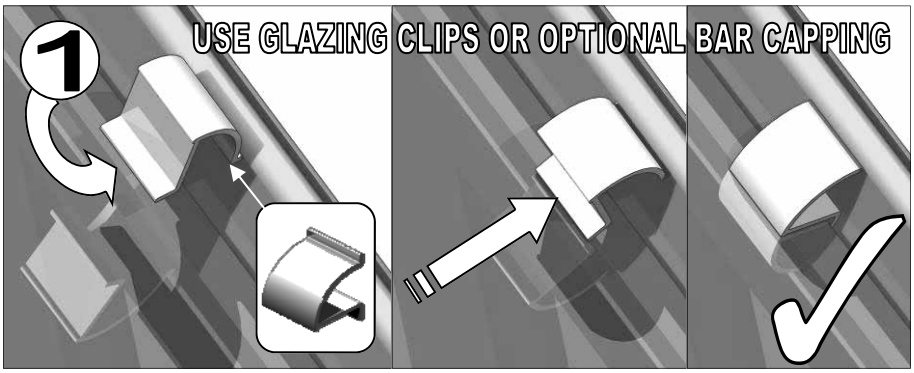
1
USE GLAZING CLIPS OR OPTIONAL BAR CAPPING

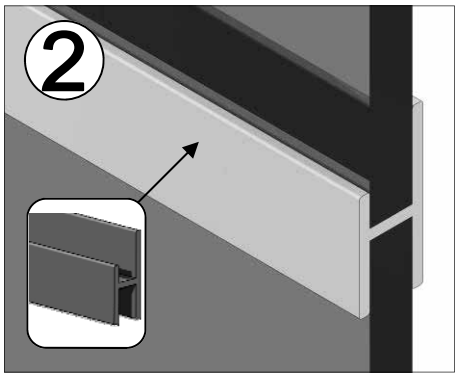
2

8

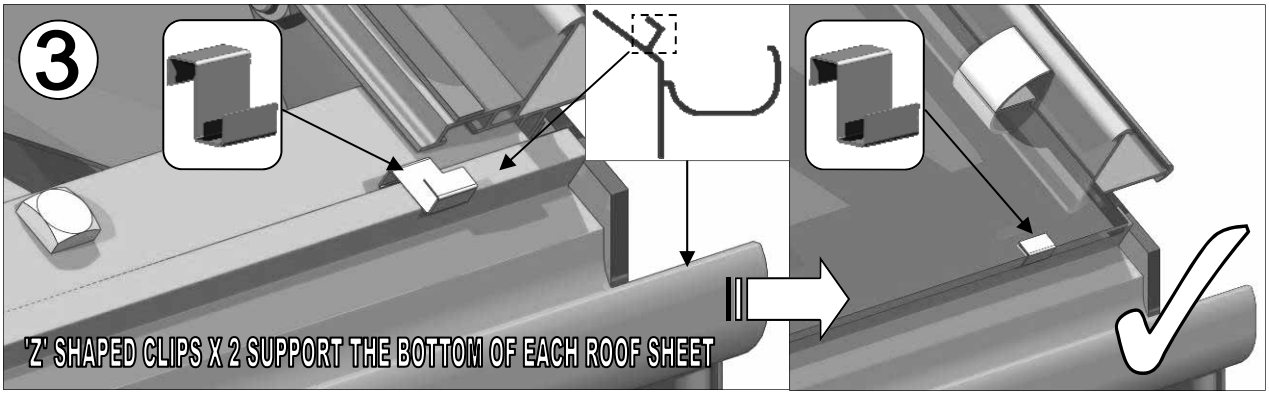
3
'Z' SHAPED CLIPS X 2 SUPPORT THE BOTTOM OF EACH ROOF SHEET

TOUGHENED GLASS

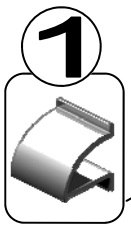

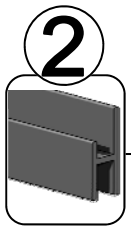

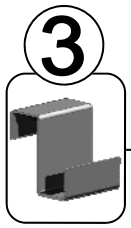

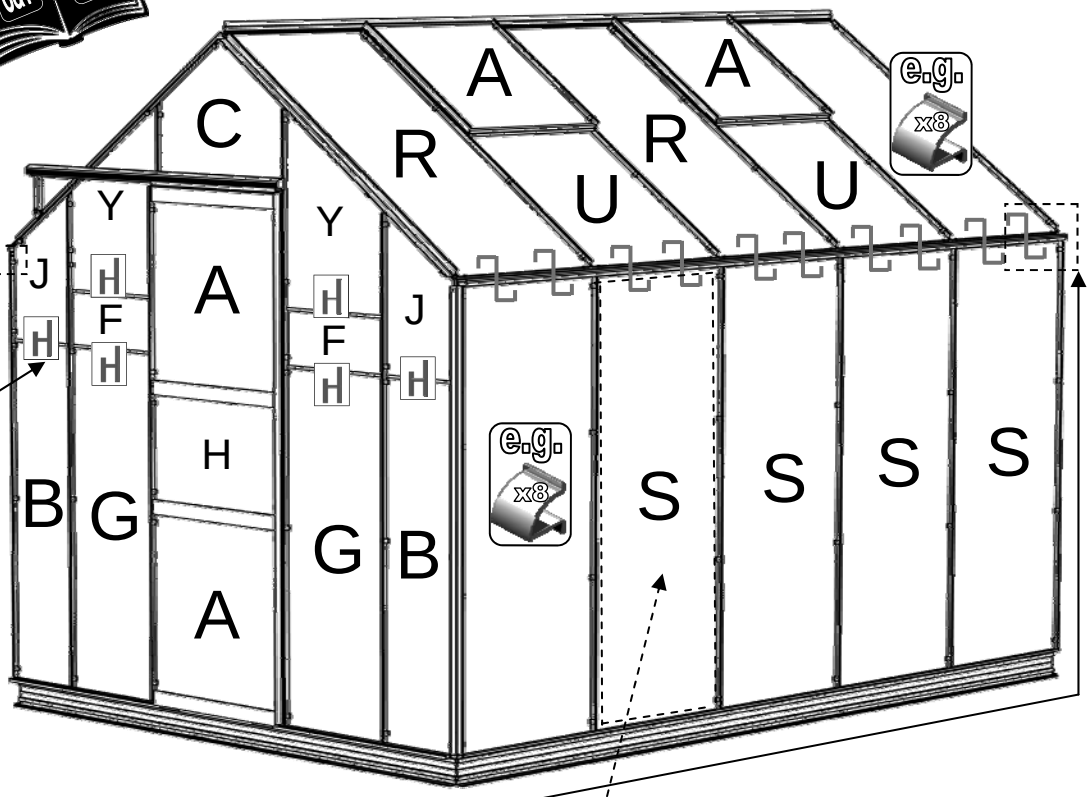

	Size (mm)	4’	6’	8’	10’	12’
S	610 X 1500	5	7	9	11	13
R	610 X 1322	3	5	6	8	10
U	610 X 719	1	1	2	2	2
A	610 X 610	3	3	4	4	4
D	610 X 277	1				
F	457 X 190	4				
B	305 X 1197	4				
G	457 X 1197	4				
H	610 X 363	1				
H	610mm	12				

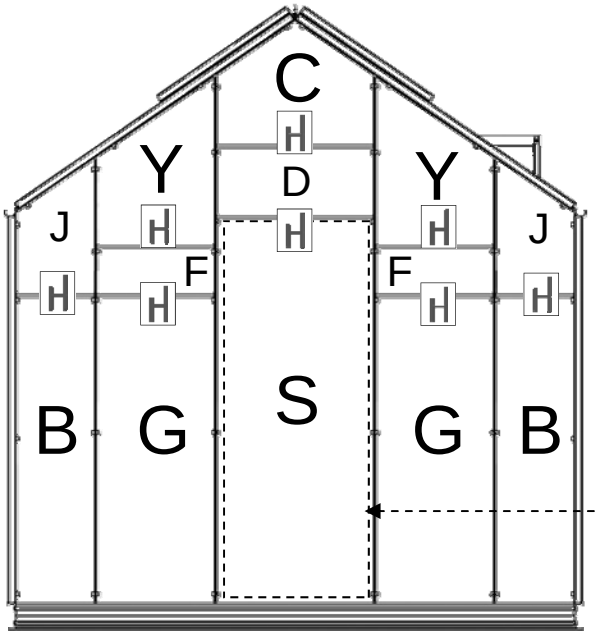

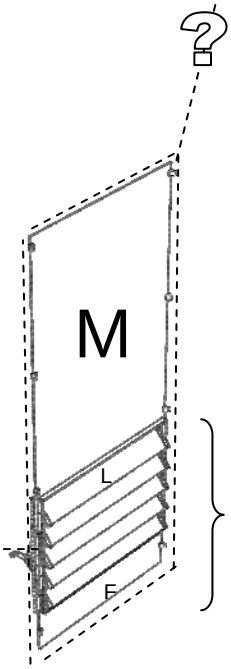

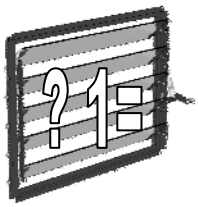

M	610 X 904	1
F	610 x 153	1
L	573 x 100	5

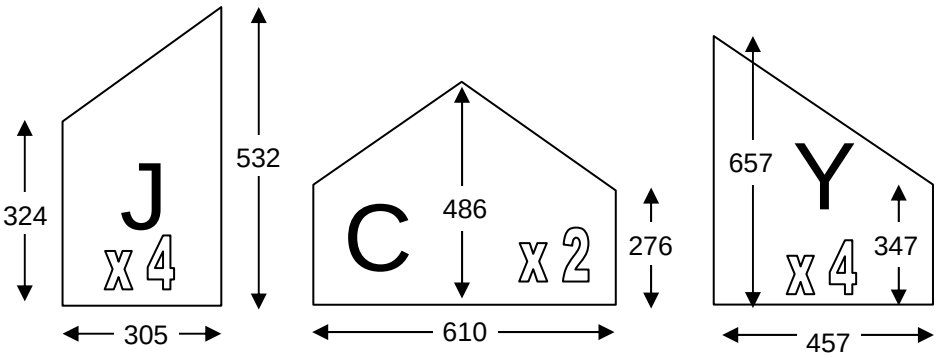

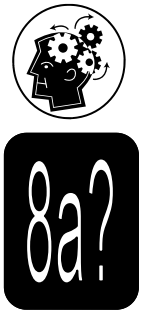

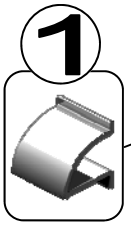

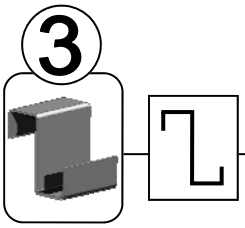

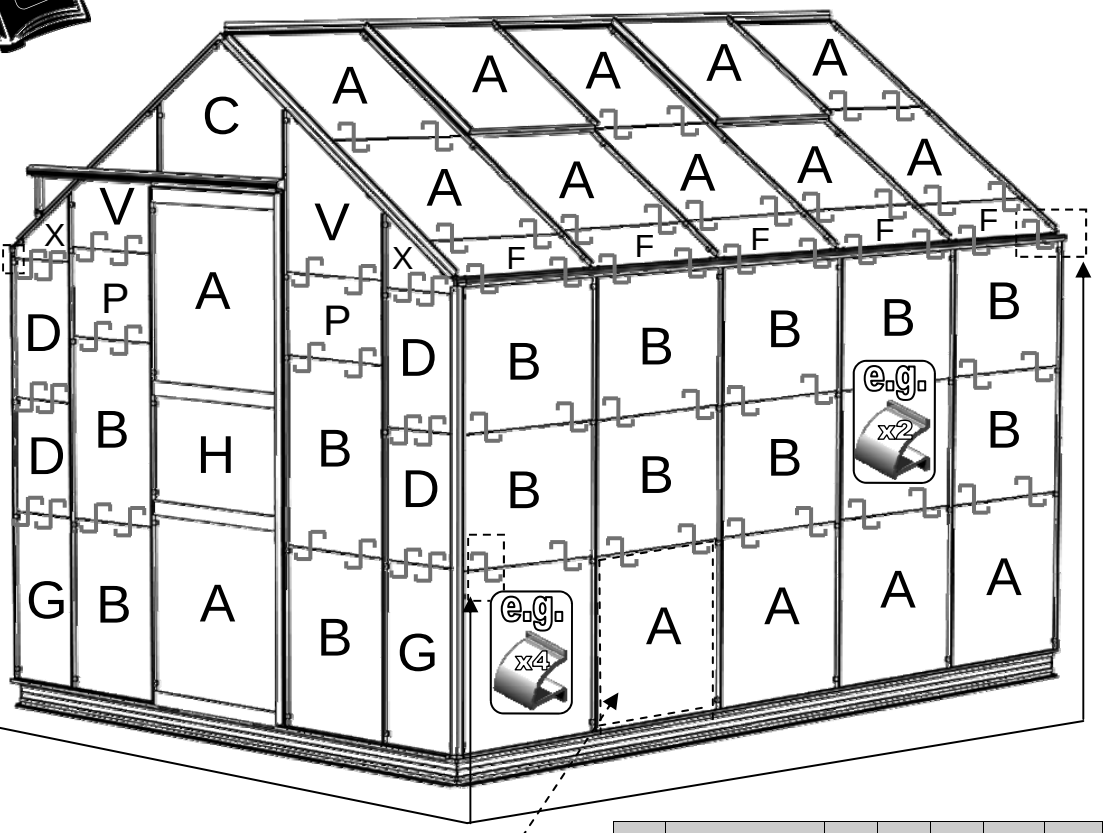

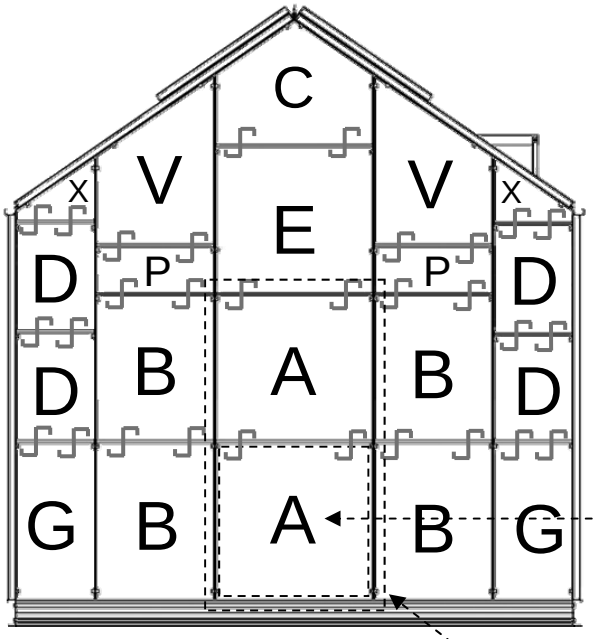

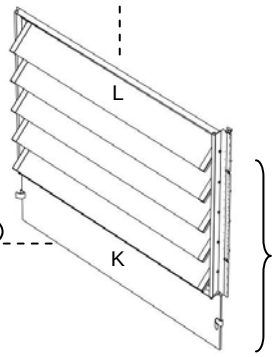

	Size (mm)	4’	6’	8’	10’	12’
A	610 X 610	16	22	28	34	40
B	610 X 457	16	20	24	28	32
F	610 X 120	4	6	8	10	12
D	457 X 305	8				
E	610 X 589	1				
G	610 X 305	4				
H	610 X 363	1				
P	457 X 276	4				

K	610 x 153	1
L	573 x 100	5

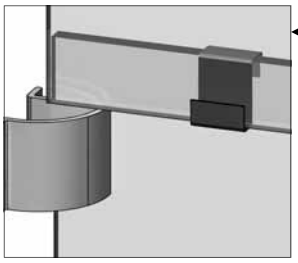

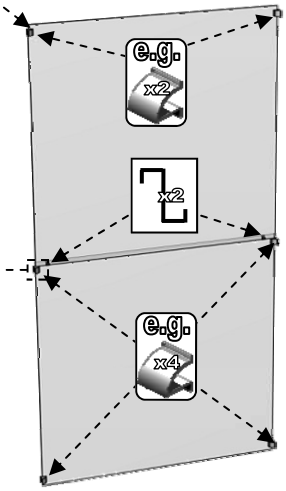

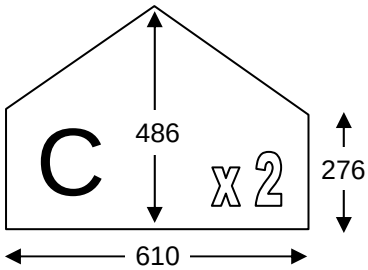

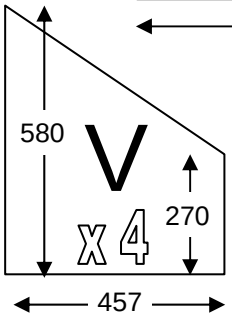

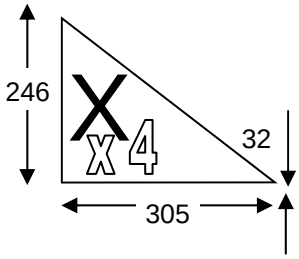

POLYCARBONATE GLAZING

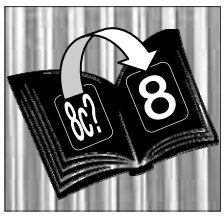

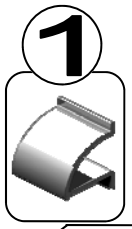

Or optional capping?

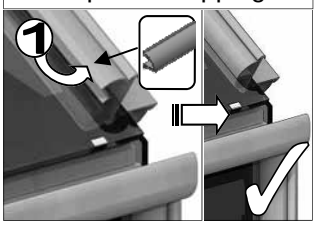

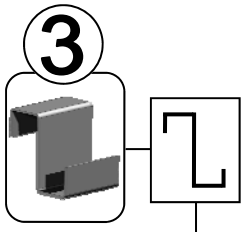

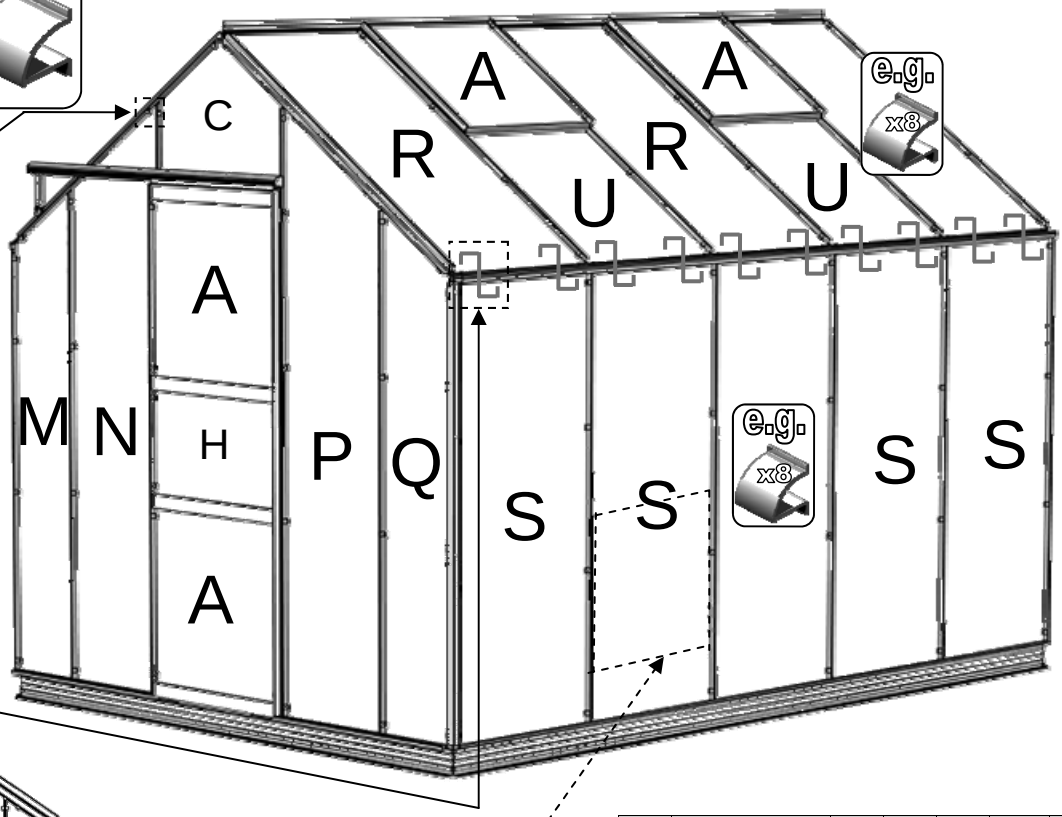

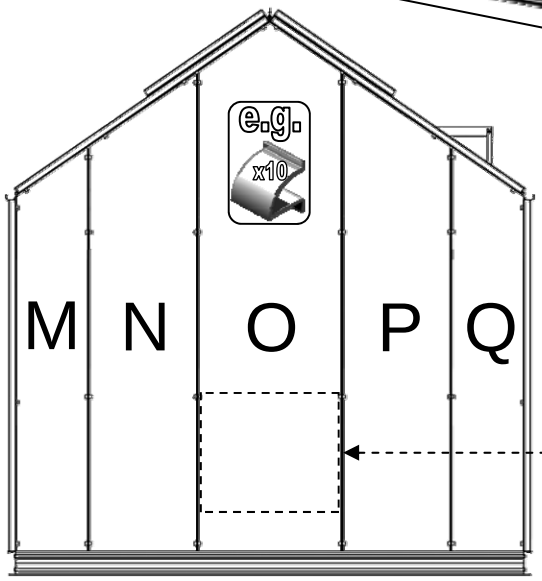

	Size (mm)	4’	6’	8’	10’	12’
S	610 X 1504	4	6	8	10	12
R	610 X 1322	3	5	6	8	10
A	610 X 610	3	3	4	4	4
U	610 X 719	1	1	2	2	2
H	610 X 363	1				

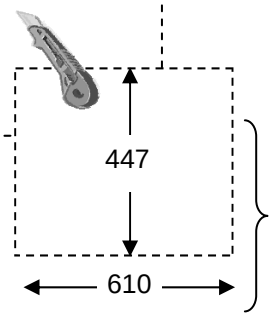

L	573 x 100	5

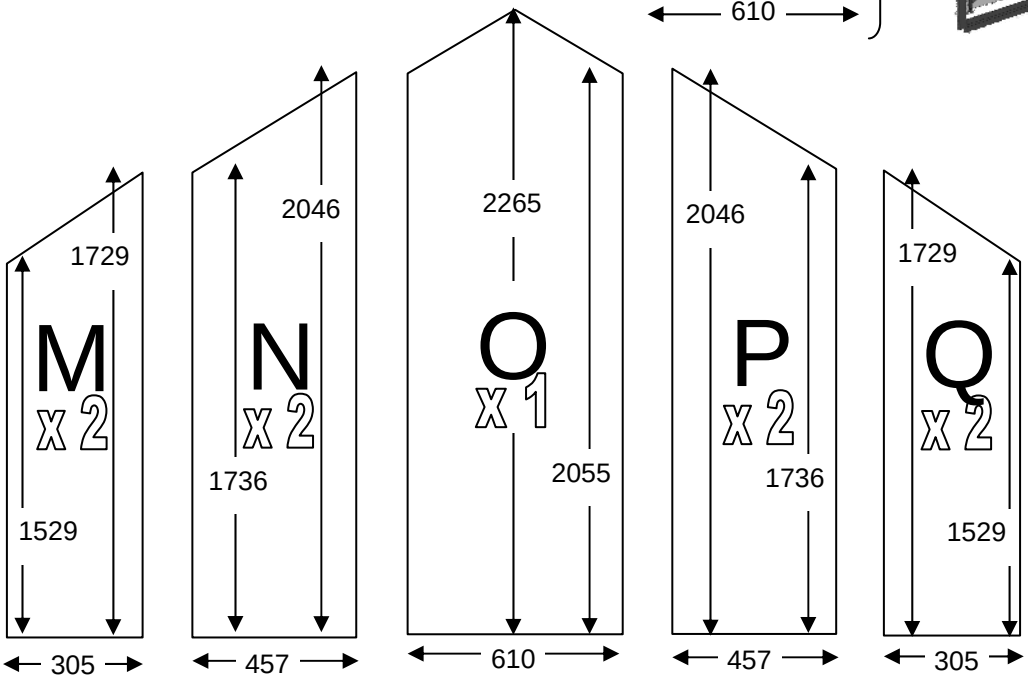

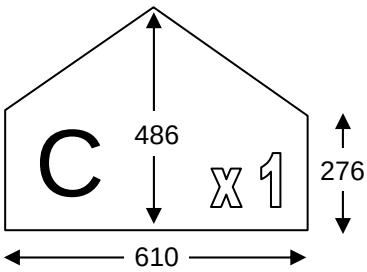

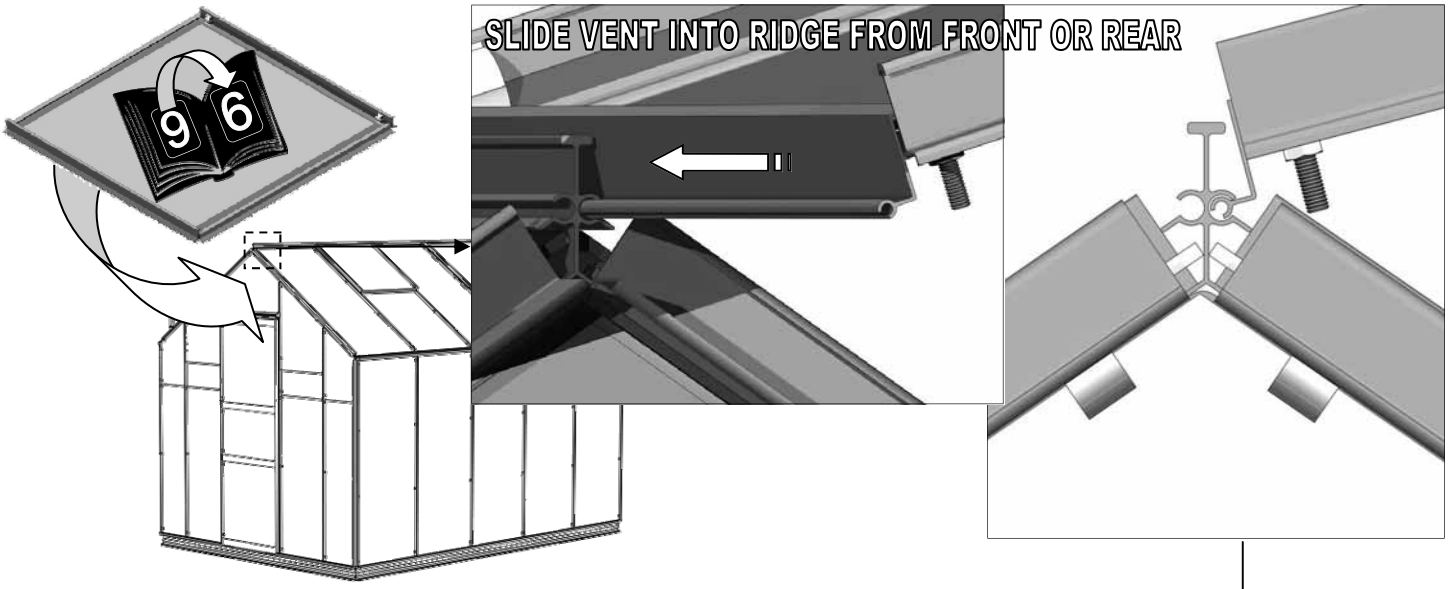
9
6
SLIDE VENT INTO RIDGE FROM FRONT OR REAR

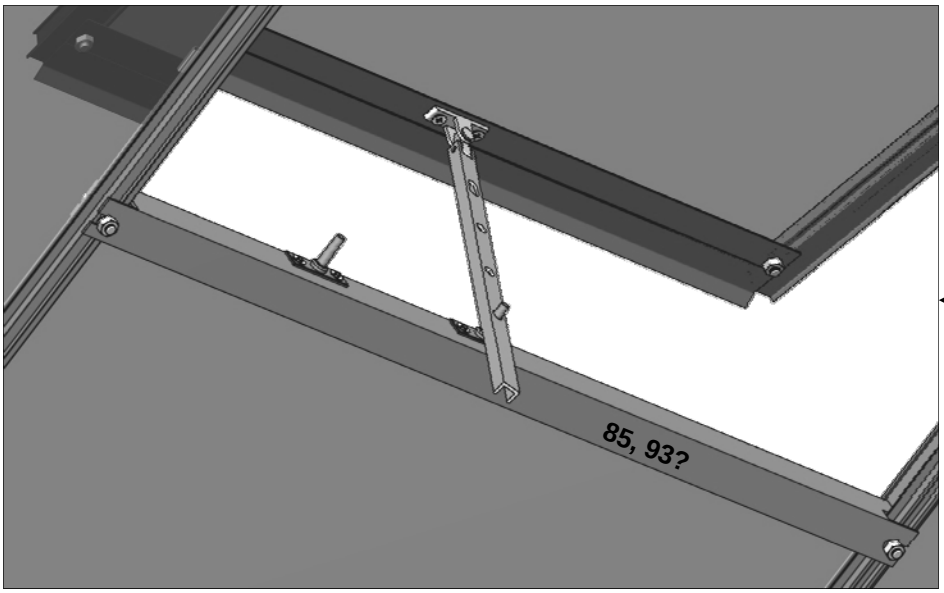
85, 93?

9
5

OPTIONAL

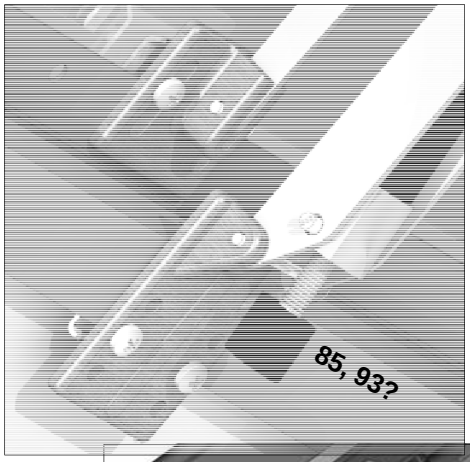
85, 93?

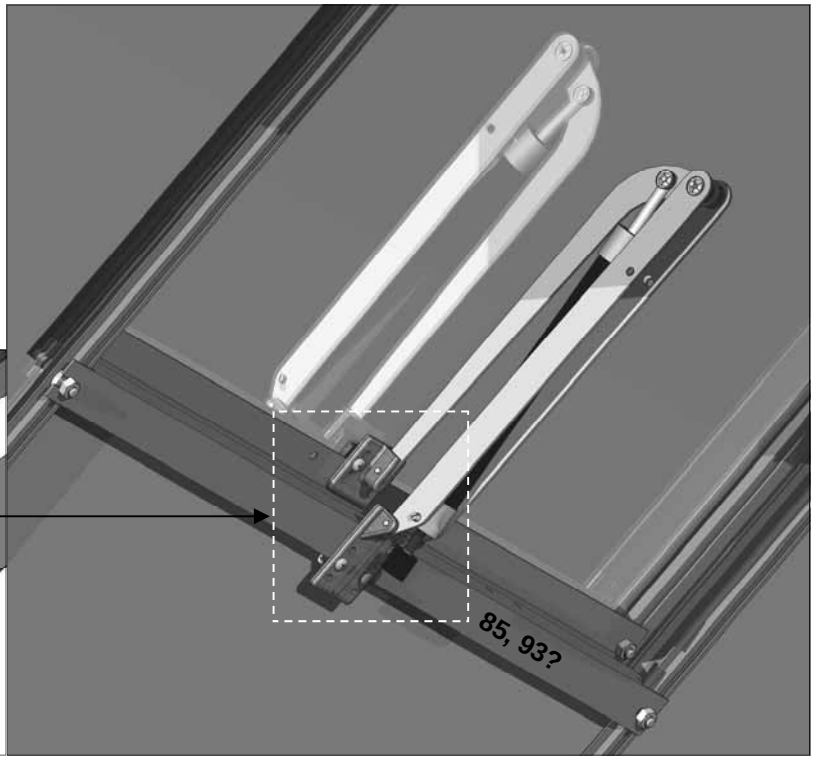
85, 93?

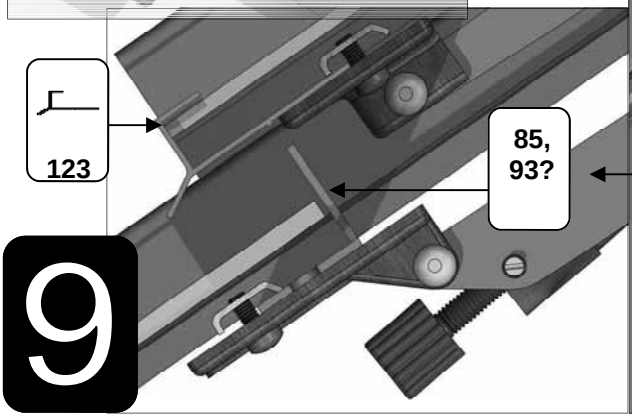
123
85,
93?

9

Attach upper door track 54 to the two bolts left ready in section 2 with nuts (position 54 vertically and push it through the central section between the two glaze bars. Twist 54 so that the slots in the mounting bar are facing upwards). Slide doors into upper track (54) and lower track (240), adjust the height of 54 until the door is running smoothly leaving enough room for the pane of glass above.

54		1275	1

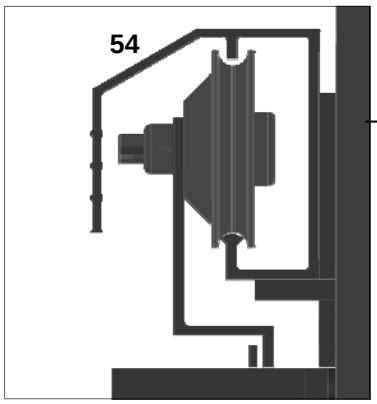

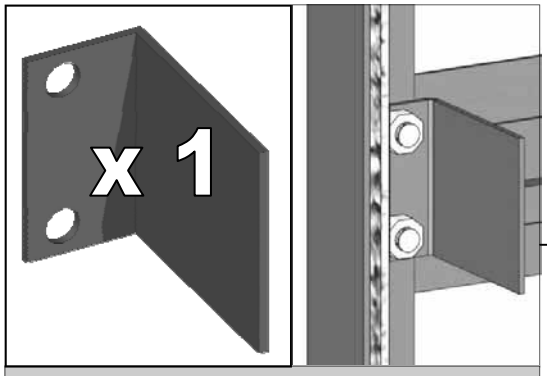

Carefully remove 2 nuts from door rear and attach door stop/handle (see diagram). Re-attach the nuts!

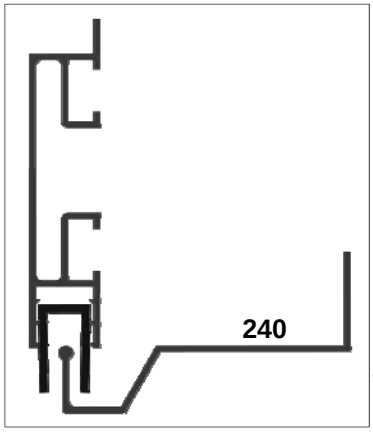

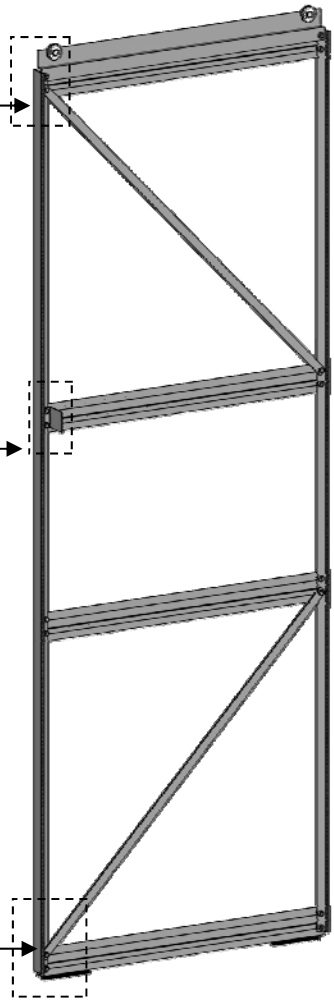

79		168	1
300		n/a	1

A bracket is supplied to help support the of the door track '54' when the door is in the open position. A hole is pre-punched into the rear face of '54'. You can also drill a 6mm hole in the corresponding front roof corner bar. The holes position is determined by the height at which you have set your door, attach the '79' and '300' bracket to '54 firstly and then drill through the bracket hole into the roof corner bar and attach with a nut and bolt being careful to avoid any glass.

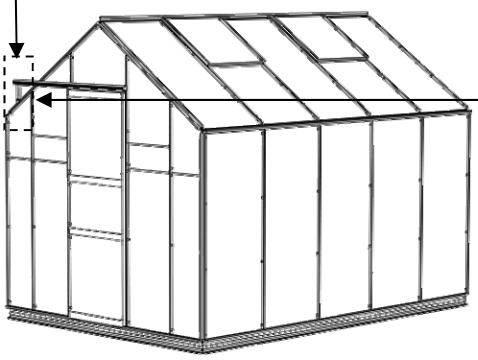

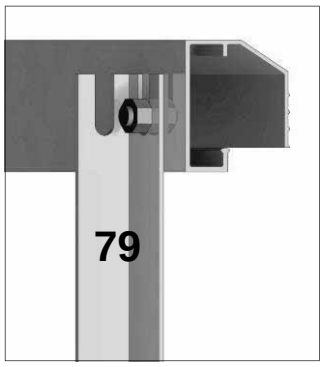

10

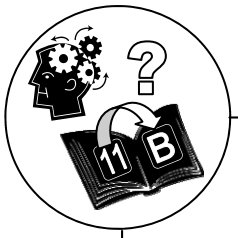

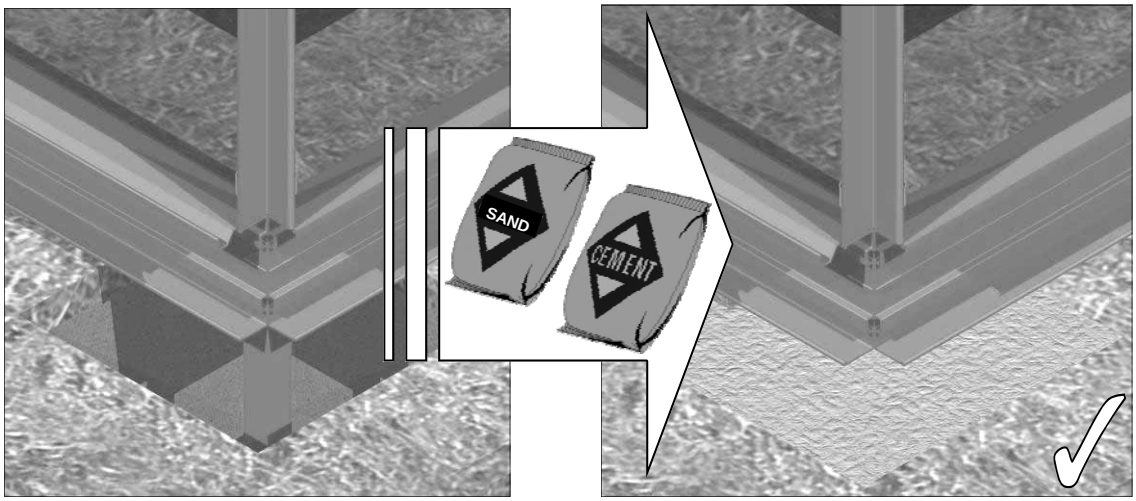

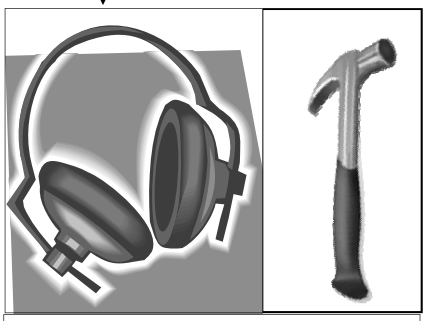

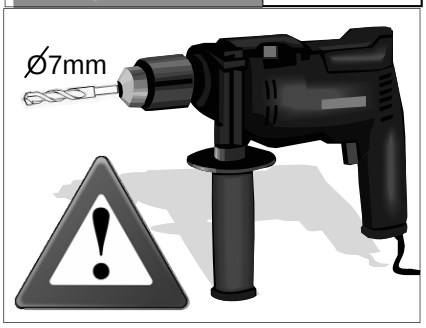

No 10 x 2”

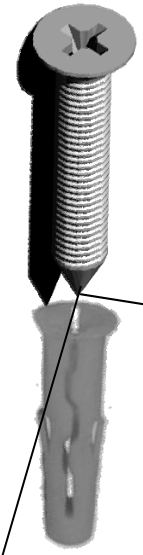

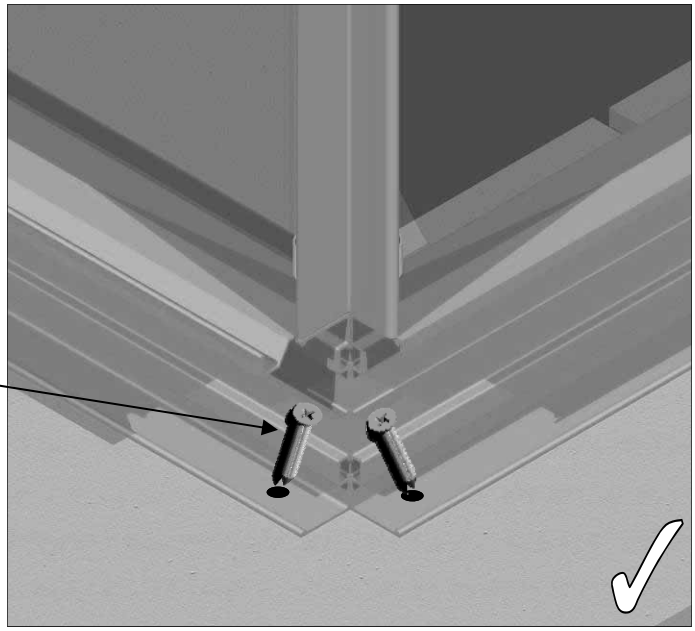

Please note you will have to drill and screw through your metal base and into your solid foundation at an angle from outside the building.

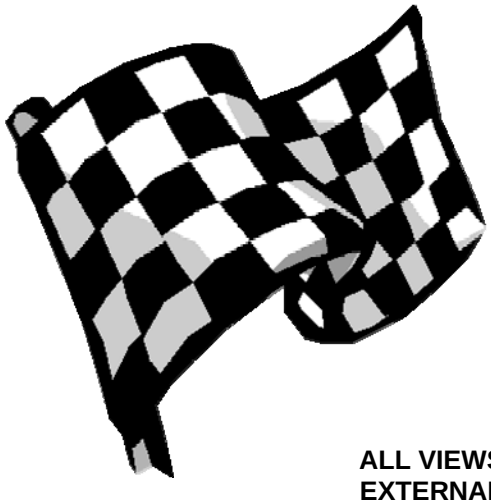

ALL VIEWS EXTERNAL

Hints and Tips!

Vent top corner siliconed along with bar capping.

To help waterproof the building it is a good idea to use a transparent all-weather silicone inside and outside of the building where there are any gaps. Also the top of the vents can be siliconed.

Inside eave area siliconed.

7'HE packing List

No	mm	4'		6'		8'		10'		12'	
1	3720									2	PACKED SEPERATELY
2	3720									1	
3	3720									2	
5	3100							2	PACKED SEPERATELY		
6	3100							1			
8	3100							2			
12	2480					1					
14	2480					2					
17	2480					2					
21	1585	2		4		4		4		4	
25	1860			2							
26	1860			1							
27	1860			2							
41	1763	2		2		2		2		2	
42	1730	2		2		2		2		2	
43	1730	2		2		2		2		2	
47	1504	2		4		6		8		10	
54	1275	1		1		1		1		1	
55	1240	2									
57	1240	1									
58	1240	2									
76	1504	2		2		2		2		2	
77	1504	2		2		2		2		2	
79	168	1		1		1		1		1	
85	628	1									
93	636			1		2		2		2	

No	mm	4'		6'		8'		10'		12'	
95	614	1		1		1		1		1	
121	612	1		1		2		2		2	
123	612	1		1		2		2		2	
124	610	2		2		4		4		4	
130	619	4		4		4		4		4	
137	883	2		2		2		2		2	
240	2174	1		1		1		1		1	
241	2174	1		1		1		1		1	
242	2154	1		1		1		1		1	
243	2050	2		2		2		2		2	
244	2050	2		2		2		2		2	
245	1296	2		2		2		2		2	
246	1296	2		2		2		2		2	
247	1305	2		4		6		8		10	
248	1390	2		4		4		4		4	
249	773	2		2		2		2		2	
285	1647	4		4		4		4		4	
600	608	PART CAN BE 139 OR 600				1		2		3	
		1		1		2		2		2	
		5		6		6		7		8	
		4m		4m		4m		4m		4m	
SMA DOOR		1		1		1		1		1	
		1 smalls pack for correct size of building									

BOX PACKED BY ……